STANDARD BIDDING DOCUMENTS

GUYANA POWER AND LIGHT INC

Procurement of Goods

IFB # GPL- PD - 007- 2022

Supply of:
Transmission & Distribution Materials / Line Hardware

March 2022

Closing Date: April 11, 2022 @ 14:00 hrs or 2:00pm
Bid Opening: April 11, 2022 @ 14:30 hrs or 2:30pm

Invitation for Bids (IFB)

Cooperative Republic of Guyana

IFB# GPL - PD – 07 - 2022

1. The Guyana Power and Light Incorporated (GPL) invite sealed bids from eligible bidders for the supply of **Transmission & Distribution Materials / Line Hardware**

A bid Security of 2 % of the tendered sum ***must*** be submitted along with the bid.

Bids shall be valid for 90 days after the date of bid opening.

Bids must be submitted via email to our electronic tender box: gpltenderbox@gplinc.com

- Bids must be submitted with a valid **National Insurance (NIS) & Guyana Revenue Authority Compliance Certificate**
- Bidders can bid for any lot, multiple lots or all lots.
- The procuring entity reserves the right to issue one, multiple or all lots to one bidder or multiple bidders.

Deadline for submission of bids is 14:00 hrs. (2:00 p.m.) on**, April 11, 2022.**

Bid opening is scheduled for 14:30 hrs (2:30 pm) on**, April 11, 2022** at GPL's Board Room 91 Duke Street, Kingston, Georgetown, Guyana via Zoom Call in the presence of Bidders/ Representatives who may choose to attend.

IMPORTANT: Bidders downloading the bid document must forward a registration
E-mail to kgeorge@gplinc.com and proc_mng_sect@gplinc.com stating the following: Name of Bidder, Address, Contact Number and Email address.

All queries must be submitted only to tenderqueries@gplinc.com referencing name and bid document number.

The above information will be used to inform bidders of any amendments to the bidding document and also to forward all responses to queries.

GPL reserves the right to reject any or all bids.

CONTENTS

Invitation For Bids (IFB)	……..	2
Instruction To Bidders (ITB)	……..	4
Bid Data Sheet (BDS)	……..	10
General Conditions of Contract (GCC)	……..	12
Special Conditions of Contract (SCC)	……..	16
Schedule of Requirements	……..	20
Bid Delivery Schedule	……..	28
Qualification Information	……..	29
Supplier's Bid	……..	31
Supply Contract	……..	32
Bid Security	……..	34
Bid Securing Declaration	……..	35
Manufacturer's Authorization	……..	36
Performance Security	……..	37
Letter of Acceptance	……..	38
Power of Attorney	……..	39
Bank Guarantee	……..	40
Evaluation and Qualification Criteria	……..	41
Appendix 1	……..	44
Appendix 2	……..	396

INSTRUCTIONS TO BIDDERS

A. Introduction

1. Description of the Procurement

The Procuring Entity is Guyana Power and Light Inc. that intends to procure the goods identified in the *Bid Data Sheet* and in the Schedule of Requirements.

2. Eligibility and qualifications of Bidders

2.1 In order to be awarded a procurement contract, Bidders should possess the technical and financial capacity needed to perform the contract. They should fulfill their tax and national insurance fund liabilities in Guyana and should not currently be subjected to a debarment penalty and must comply with the specific eligibility and qualification requirements referred to in the *Bid Data Sheet*. Bidders shall provide the information and any supporting documentation required by the Qualification Information Form.

2.2 The bidders should not have conflict of interests, including involvement in more than one bid in this proceeding, should not be associated nor have been associated in the past, directly or indirectly, with any agency or any of its representatives, or affiliates, that have been engaged by the Procuring Entity to provide consulting services at the preparation stage of the bidding documents, technical specifications and other documentation that are subject to be used in the procurement of goods, which must be purchased in accordance with the Invitation for Bids. In cases where the indicated facts are discovered, the Bidder's bid shall be rejected.

B. Bidding Documents

3. Clarification and amendment of bidding Documents

3.1 The Procuring Entity in not more than three (3) calendar days, will respond in writing (including by fax or electronic mail) to any request for clarification of the bidding documents to be received (in writing, including by fax or electronic mail) not later than 5 calendar days before the expiry of a deadline for submission of bids. At the same time, the Procuring Entity's response shall without identifying its source of the request, be distributed to all bidders who have received the bidding documents from the Procuring Entity.

3.2 At any time before the deadline for submission of bids, the Procuring Entity may amend the bidding documents by issuing an Addendum and notifying it to the prospective bidders.

C. Preparation of Bid

4. Language of Bid

4.1 The bid prepared by the Bidder, as well as all correspondence and documents related to that bid and exchanged by the Bidder and the Procuring Entity shall be written in the language *specified in the Bid Data Sheet*.

5. Documents Included in Bid

5.1 The bid prepared by the Bidder should contain the Form of Bid, the Price Schedules and the other documents to be submitted in accordance with these Instructions to Bidders.

6. Bid Price

6.1. Subject to the choice of INCOTERMS as indicated in the Bid Data Sheet, the prices given in the Price Schedule shall include all transportation costs to the destination point indicated in the Contract, all taxes, duties, payments collected, in accordance with the laws of Guyana and delivery related and other costs on performing of contractual obligations.

6.2. The prices offered by the Bidders shall remain fixed during the whole period of Contract performance and shall not be modified in any circumstance.

7. Bid and Payment Currency

7.1 The prices shall be indicated in UK Pounds, US Dollars or Euros for Foreign Suppliers and Guyana Dollars for Domestic Suppliers, unless otherwise specified in the *Bid* Data Sheet.

8. Bid Security / Bid Securing Declaration

8.1 Unless otherwise provided in the *Bid Data Sheet*, the Bidder shall furnish, as part of his bid, a Bid Security, in the form, currency and amount specified in the *Bid Data Sheet* with a validity period for not less than 2 weeks upon the expiry of the bid validity period and in line with the form provided, or, if so indicated in the BDS, a Bid Securing Declaration in accordance with the form provided. **A Bid Securing Declaration is not required.**

8.2 The bid security may be forfeited, or the Bid Securing Declaration executed, if the Bidder:

(a) withdraws his/her bid after it is opened during the period of validity specified in the bid; or,

(b) Having been awarded the contract fails:

(1) To sign the contract on the terms and conditions provided in his bid; or

(2) To furnish the Performance Security, if required to do so.

9. Period of Validity of Bid

9.1 Bids shall remain in force during the period specified in *the Bid Data Sheet* after the date of bid opening.

10. Deadline for Submission of Bids

10.1 Bids must be received by the Procuring Entity at the address and within the periods specified in *the Bid Data Sheet.* All bids received by the Procuring Entity upon the expiry of a period established for submission of bids as indicated by the Procuring Entity shall be rejected and returned to the Bidder unopened.

11. Modification and Withdrawal of Bids

11.1 The Bidder may modify or withdraw his bid after the bid's submission, provided that the Procuring Entity will receive a written notice of modification, including substitution or withdrawal of bid until the expiry of established period for submission of bids.

D. Opening and Evaluation of Bids

12. Opening of Bids

12.1 Reserved

12.2 The bidders' names, bid prices, including alternatives (if alternatives permitted), information on the presence or absence of required bid security, or bid securing declaration, information on the presence (absence) of tax debts and debts of social insurance payments will be announced at the opening. No bid may be rejected at the opening, exclusive of late bids to be returned to the Bidder unopened.

12.3 Bids (and modifications sent pursuant to ITB Clause 12.2) that are not opened and read out during the bid opening shall not be accepted for further evaluation, regardless of circumstances.

13. Evaluation of Bids

13.1 During the evaluation of bids, the Procuring Entity may, at its discretion, request the Bidder to provide clarification of his bid. The request for clarification and the response thereto shall be made in writing, and in that case no change in price or substance of the bid shall be sought, offered, or permitted.

13.2 The Procuring Entity shall determine the responsiveness of each bid to requirements of the bidding documents. For the purposes of this Clause a substantially responsive bid is one which satisfies all the indicated provisions without a material deviation or reservation.

13.3 The Procuring Entity may waive any minor nonconformity or small mistake or inaccuracy in the bid, which is not a material deviation from the requirements of the bidding documents, and such non-conformity or inaccuracy will not affect the bid evaluation. To the extent feasible and appropriate, for the purposes of comparing bids, acceptable deviations shall be quantified in monetary terms and reflected in adjustments to the bid price (for the purposes only of comparison of bids).

13.4 Arithmetical errors shall be rectified in the following manner: if there is a discrepancy between the unit price and the total price that is obtained by multiplying the unit price and quantity, the unit price shall prevail, and the total price shall be corrected. If there is a discrepancy between words and figures, the sum in words shall be preferable. If the Bidder disagrees with such correction of errors,

his/her bid shall be rejected.

13.5 The Procuring Entity shall evaluate and compare only the bids that are determined to be responsive to the bidding documents.

13.6 The methodology to adjust the price to reflect the price of the missing or non-conforming item or component is the average price of the item of all responsive bids.

14. Confidentiality and Contacting the Procuring Entity

14.1 No Bidder shall contact the Procuring Entity on any matter related to his/her bid from the date of bid opening until the date of contract award, except for requests related to clarification of the bid. Information concerning the evaluation of bids is confidential.

14.2 Any effort by the Bidder to influence the Procuring Entity's decision on bid evaluation and comparison, or contract award may result in the rejection of that Bidder's bid.

E. Award of Contract

15. Award Criteria

15.1 Subject to ITB Clause 18, the Procuring Entity will award the Contract to the Bidder whose bid is determined to be substantially responsive to the requirements of the bidding documents, and who offered **the Lowest Evaluated Bid** (the bidder awarded the highest points), provided that the Bidder has been determined:
(a) to be eligible pursuant to Clause 2;
(b) to comply with qualification requirements, in accordance with Clause 2, and any technical requirements and technical evaluation criteria disclosed in the bidding documents.

16. Procuring Entity's Right to Vary Quantities at Time of Entering into a Contract

16.1 The Procuring Entity reserves the right, when entering into a contract, to increase or decrease the quantity of goods and related services specified in the Schedule of Requirements, by the percentage indicated in the *Bid Data Sheet***,** no change in the unit price or other conditions shall be made.

17. Procuring Entity's Right to Accept Any Bid and to reject All Bids

17.1 The Procuring Entity reserves the right to accept or reject any bid or all bids, and to cancel the bidding process at any time prior to award of contract, without thereby incurring any liability to Bidders and without being required to inform the Bidder or Bidders of reasons of such actions.

18. Notification of Award

18.1. The bidder whose bid is accepted will be notified of the award of contract by the Procuring Entity prior to expiration of the quotation validity period.

18.2. The notice of acceptance shall be equal to entering into a Contract, provided that the Bidder furnishes the performance security and the signed Contract.

18.3. At the same time that the Procuring Entity notifies the successful Bidder in accordance with sub-clause 18.1, the Procuring Entity will notify all other Bidders of the name of successful Bidder, and his bid price.

18.4 The evaluation report and comparison of bids will not be sent to bidders.

19. Signing of Contract and performance security

19.1 At the same time with notification of award, the Procuring Entity will send the successful Bidder the Form of Contract contained in the bidding documents. The successful Bidder shall sign and date the Contract, and return it to the Procuring Entity during seven (7) days of receipt of notice of award.

19.2 Together with the signed Contract, the Bidder shall, if required to do so by the *Bid Data Sheet*, furnish the Procuring Entity with a Performance Security in the amount and form specified in the *Bid Data Sheet*.

19.3 If the successful Bidder fails to furnish the performance security, if required to do so, or within seven (7) days fails to return the Contract signed by him, then it shall be a sufficient ground to refuse the award of Contract, and to forfeit the bid security, or execute the bid-securing declaration. In that case, the Procuring Entity shall award the Contract to the next lowest evaluated Bidder, subject to the right of the Procuring Entity to reject all bids.

20. Settlement of disputes

20.1 To settle the disputes, which may arise during the execution of the Contract, the parties shall follow the procedure referred to in the *Bid Data Sheet*.

21. Corrupt and Fraudulent Practices

21.1 The Procuring Entity requires that Bidders observe the highest standards of ethics during the procurement and execution of such contracts. In pursuance of this policy, the Procuring Entity:

(a) will reject the bid if it establishes that the Bidder recommended for award has engaged in corrupt, fraudulent, collusive, or coercive practices in competing for the Contract in question;

(b) will declare the Supplier, for indefinite or specified period of time, to be ineligible to participate in state-financed biddings, in accordance with applicable debarment procedures.

1. Compliances

22.1 Bidder registered in Guyana must submit valid certificates of compliances from Guyana Revenue

Authority (GRA), National Insurance Scheme (NIS), and (VAT registration is required only if item being supplied is Vatable).

23. Defects Liability:

23.1 The "Defects Liability Period" for the goods and related services is twelve (12) months from the date of taking over possession or such other period as may be specified in the Bid Data Sheet. During this period, the supplier will be responsible for replacing any defective item free of cost to the Procuring Entity.

24. Inspection and Testing

24.1 The Bidder shall at its own expense and at no cost to the Procuring Entity carry out all testing and/or inspections of the Goods and Related Services as are specified in the Technical Specification**.** Whenever the Bidder is ready to carry out any such test and inspection, it shall give a reasonable advance notice, including the place and time, to the Procuring Entity.

The Bidder shall obtain from any relevant third party or manufacturer any necessary permission or consent to enable the Procuring Entity or its designated representative to attend the test and/or inspection.

24.2 The Procuring Entity may require the Bidder to carry out any test and/or inspection not required by the Contract but deemed necessary to verify that the characteristics and performance of the Goods comply with the technical specifications codes and standards under the Contract.

24.3 The Bidder shall provide the Procuring Entity with a report of the results of any such test and/or inspection.

24.4 The Procuring Entity may reject any Goods or any part thereof that fail to pass any test and/or inspection or do not conform to the specifications. The Bidder shall either rectify or replace such rejected Goods or parts thereof or make alterations necessary to meet the specifications at no cost to the Procuring Entity, and shall repeat the test and/or inspection, at no cost to the Procuring Entity, upon giving a notice.

24.5 The Bidder agrees that neither the execution of a test and/or inspection of the Goods or any part thereof, nor the attendance by the Procuring Entity or its representative, nor the issue of any report, shall release the Bidder from any warranties or other obligations under the Contract.

Bid Data Sheet (BDS)

The following specific data to clauses of the provisions of Instructions to Bidders which supplement, or amend the provisions of the Instructions to Bidders (ITB) whenever there is a conflict, the provisions herein shall prevail over those in ITB

Item No.	
ITB 1.1	Guyana Power and Light Inc. of 40 Main Street Georgetown Guyana Telephone #592-226-9598 Email: gpersaud@gplinc.com The subject of the procurement is: **The Supply of Transmission & Distribution Materials / Line Hardware**
ITB 2.1	To qualify for award of the Contract, the bidders shall provide satisfactory evidence to the Procuring Entity of their capability and adequacy of resources to carry out the Contract effectively: (a) Copies of original documents defining the constitution or legal status, place of registration and principal place of business. (b) Experience as a supplier in carrying out of two (2) or more supplies of a similar items within the last three (3) years. (c) Average Turnover for the last three years should be at least USD $400,000. (d) Evidence of access to lines of credit and availability of other financial resources. (e) Evidence of compliance with NIS, GRA, Vat registration if applicable (Only applies to local Supplier). (f) To be covered by an express warranty period of no less than twelve (12) months. (g) Submission of Technical Specification. (h) Letter of Authorization from Manufacturer. (i) Manufacturers authorization form. (j) Resubmission of GPL's Specification do not qualify. (k) **Wherever practicable sample(s) may accompany a bid. The Procuring Entity reserves the right to request sample(s) before the awarding of a tender.**
ITB 3.1	Language of Bid shall be English

ITB 4.1	Other documents to be submitted includes; GRA and NIS Compliances, **(TIN Certificate and VAT Registration if the item/s being procured attract VAT). Only applies to Bidders whose registered office is within Guyana.**
ITB 5.1	The price quoted by Bidders shall be on the basis of CIF for goods delivered from abroad and for goods delivered from within Guyana. Incoterms 2010 shall apply.
ITB 6.1(a) **ITB 6.1(b)** **ITB 6.1(c)**	For Goods and Related Services with orign in the Procuring Entity's country, the currency of the bid shall be Guyana Dollars (GY$) (Bidders with registered business in Guyana must submit their bid in Guyana Dollars (GY$). The prices shall be indicated in UK Pounds, US Dollars or Euros for Foreign Suppliers and Guyana Dollars for Domestic Suppliers. The currency that will be used for bid evaluation and comparison purposes to convert all bid prices expressed in various currencies into a single currency is the Guyana Dollars . The source of exchange rate shall be the Bank of Guyana, and the selling rate shall be used. The date for exchange rate shall be ten days before the opening of tenders.
ITB 7.1	A bid security of 2% of the tendered sum is required. A signed Bid Securing Declaration is not required.
ITB 8.1	The period of validity of bid is 90 Days.
ITB 9.1	Deadline for submission of bids: **14:00 hours on <u>April 11, 2022.</u>** Attention: Secretary to the Tender Board, Guyana Power and Light, Inc. 91 Duke Street, Kingston Georgetown Guyana South America.
ITB 10.1	Time and place for opening of bid: The Board Room, Guyana Power and Light, Inc., 91 Duke Street, Kingston, Georgetown, Guyana, South America.
ITB 11.1	When entering into a contract, the Procuring Entity reserves the right to Increase or decrease quantities of goods by 10%.
ITB 12.1	The performance security shall be 10% of the Contract Price and in the form of a Bank Guarantee or Manager's Cheque drawn on a bank registered and operating in Guyana.
ITB 13.1	Disputes that may arise in the performance of the contract shall be settled in accordance with the Procurement Act 2003.
ITB 14.1	The duration of the defects liability period is to be stated by the Bidder.

General Conditions of Contract (GCC)

The General Conditions are the Standard General Conditions of Contract. No alteration shall be made on the pages of these Conditions. The Procuring Entity, when amending or supplementing the General Conditions of Contract should do so only in the Special Conditions of Contract. Any amendment or addenda of the General Conditions of Contract shall conform to the legislation of Guyana.

1. Definitions and application

1.1 This Contract lists below the terms that have the following interpretation:

(a) "**Contract**" means the agreement entered into between the Procuring Entity and the Supplier, as recorded in the Form of Contract signed by the parties, including all attachments and appendices thereto and all the documents referenced therein;

(b) "**Contract Price**" means the price payable to the Supplier under the Contract for complete and proper performance of his contractual obligations;

(c) "**Goods**" means the item(s) referred to in the SCC;

(d) **"GCC" -** means the General Conditions of Contract contained in this Section;

(e) **"SCC" -** means the Special Conditions of Contract;

(f) **"Procuring Entity"** – means the Procuring entity carrying out the procurement of Goods, specified in the SCC;

(g) **"Supplier"** – means an individual or legal entity, or a combination of any above mentioned forms which operate under the existing agreement as a joint venture and supply the Goods and Services under the Contract;

(h) **"Day"** – means calendar day.

1.2 The General Conditions of Contract shall apply in the procurement of goods; the specific amendment, addition and alteration shall be indicated in the Special Conditions of Contract.

1.3 Warrant requirements are as may be specified in the special conditions of contract.

2. Contract Documents

2.1 Subject to the order of precedence set forth in the Contract Agreement, all documents forming the Contract (and all parts thereof) are intended to be correlative, complementary, and mutually explanatory. The contract shall be read as a whole.

3. Performance Security

3.1 If required by the SCC, during fourteen (14) days of receipt of notification of award, the successful Bidder shall furnish the Procuring Entity with the performance security the amount and form of which are indicated in the SCC.

4. Packing

4.1 The Supplier shall provide such packing of the Goods as is required to prevent their damage or deterioration during transit to final destination specified in the Contract, and as may be required by the Special Conditions of Contract.

5. Delivery, Transportation, Mobilization Advance

5.1 The Supplier must deliver the Goods within the periods and to the Destination point indicated in the Schedule of Requirements and shall provide the documentation indicated in the SCC. Subject to the SCC, transportation of the Goods to the place specified by the Procuring Entity shall be carried out and paid by the Supplier, and related costs shall be included in the Contract Price.

6. Payment

6.1 The payment to the Supplier for the Goods delivered shall be made in accordance with the Contract in the form and within the periods specified in the SCC**.**

6.2 The supplier shall furnish the procuring entity with the Advance Payment Guarantee in the amount and for indicated in the SCC.

7. Prices

7.1 Prices established by the Supplier in the Contract for goods delivered shall not vary from the prices quoted by the Supplier in his bid.

8. Assignment

8.1 The Supplier shall not assign, in whole or in part, his obligations under the Contract to the third party for the execution without the Procuring Entity's prior written consent.

9. Delays in the Supplier's Performance and liquidated damages

9.1 Delivery of the Goods shall be carried out by the Supplier, in accordance with the schedule indicated by the Procuring Entity in the Delivery *Schedule.*

9.2 Except for provided under GCC Clause 13, the delay in the Supplier's performance of his delivery obligations shall render the Supplier liable for payment of liquidated damages in the amount specified in the SCC, unless an extension of time is agreed upon by the parties without application of liquidated damages. Once the maximum deduction specified in the SCC is reached, the Procuring Entity may consider termination of the Contract, in accordance with Clause 10 of the General

Conditions of Contract.

10. Force Majeure

10.1 The Supplier shall not forfeit their performance security and shall not be liable for the payment of liquidated damages, or termination of Contract for failure to perform any obligation under the contract, if the failure to perform or default is the result of an event of force majeure.

10.2 "Force majeure" means an event beyond the control of the Supplier, not connected with error or negligence of the Supplier and not foreseeable.

10.3 When an event of force majeure arises, the Supplier shall promptly notify the Procuring Entity in writing of such event and its causes and to the extent possible, the expected duration of the event of force majeure and the quantity of Goods to be affected. The Supplier shall diligently search for alternative ways of execution of the Contract, irrespective of force majeure.

10.4 The Parties may agree on an extension of time for the delivery of the Goods where this is practical under the circumstances. If force majeure prevents the Supplier from performing its obligations in whole or material part for a continuous period of more than thirty (30) days from the date of the notice, the Procuring Entity may terminate the Contract by giving notice to the Supplier.

10.5 Provide always that the Parties acknowledge that this Contract is being entered into during the Covid-19 pandemic which has resulted in worldwide supply chain disruptions. The Supplier shall use its diligent efforts, as far as practicable, to ensure accuracy in its bid submissions relative to the period for delivery and price of the Goods, considering the existing circumstances. The Supplier shall not rely on the Covid-19 pandemic as an event of force majeure to delay performance of the Contract, except where performance becomes impossible as a result of measures or circumstances arising after entering into the Contract. The Supplier shall first discuss with the Procuring Entity the effect of those measures or circumstances preventing performance and whether any action may be taken to mitigate its effect. The Procuring Entity reserves the right to terminate the Contract in accordance with 10.4 above.

10.6 The procuring entity shall be entitled to make a claim on the advance payment guarantee irrespective of an event of force majeure

11. Termination

11.1 The Procuring Entity, without detriment to any other sanctions of infringement of the provisions of Contract, by written notice of default sent to the Supplier, may terminate this Contract in whole or in part:

(a) if the Supplier fails to deliver the portion or all of the Goods within the periods provided for in the Contract, or within an extension period of that Contract, or to perform any of his obligations under the Contract;

(b) if bankruptcy procedures are applied to the Supplier, or it is declared insolvent.

(c) if the Supplier, in the Procuring Entity's opinion, has engaged in corrupt, fraudulent, collusive or coercive practices when entering into or executing the Contract;

(d) if the Procuring Entity deems that continued implementation of the contract would no longer be expedient from the standpoint of the public interest;

(e) if there is prolonged force majeure as provided for in 10.4.

11.2 The notice of termination shall specify the reason of termination, the extent to which performance of the Supplier under the Contract is terminated, and the date upon which such termination becomes effective.

11.3 When the Contract is terminated in accordance with clause 10.1(d), the Goods that are complete and ready for shipment within twenty-eight (28) days after the Supplier's receipt of notice of termination shall be accepted by the Procuring Entity at the Contract terms and prices. For the remaining Goods, the Procuring Entity may elect:

(a) to have any portion completed and delivered at the Contract terms and prices; and/or

(b) to cancel the remainder and pay to the Supplier an agreed amount for partially completed Goods and Related Services and for materials and parts previously procured by the Supplier.

12. Settlement of Disputes

12.1 If any dispute or disagreement arises between the Procuring Entity and the Supplier for the Contract or in connection with it, the parties shall make every effort to resolve the dispute or disagreement amicably by mutual consultation.

12.2 If during twenty one (21) days, the parties failed to resolve their dispute or disagreement by mutual consultation; either the Procuring Entity or the Supplier may send the other party the notice of intent to commence arbitration, if an arbitration is incorporated in the Contract in the Special Conditions of Contract or otherwise agreed by the parties, or in the

Court of General Jurisdiction if no arbitration is envisaged, and no arbitration or litigation in respect of that matter may be commenced unless such notice is given.

Any dispute or disagreement in respect of which the notice of intent is sent to commence trial shall be heard by the Court of General Jurisdiction.

12.3 Notwithstanding any reference to dispute settlement herein, the parties shall continue to perform their obligations under the Contract, unless they agree otherwise.

13. Applicable Law

13.1 The Contract shall be interpreted in accordance with the laws of Guyana.

14. Formal Communication between the Procuring Entity and the Supplier

14.1 Any notice given by one party to the other pursuant to the Contract shall be in force if it is done in writing and sent at the address of other party in the SCC**.**

14.2 A notice shall be effective when delivered or on the specified date, whichever is later.

15. Taxes and Duties

15.1 The Supplier shall be fully responsible for all taxes, duties, license taxes, etc., levied in accordance with the legislation of Guyana, and subject to the application of INCOTERMS in accordance with the SCC.

16. Retention

16.1 No retention shall be applied on consumables, but warranties, guarantees and expiry dates to apply.

Special Conditions of Contract (SCC)

The following Special Conditions of Contract shall supplement the General Conditions of Contract. Whenever there is a conflict, the provisions herein shall prevail over those in the General Conditions of Contract.

GCC Clause No.	Special Conditions of Contract
1 **1.1 (f)** **1.1 (g)** **1.1(c)**	**Definitions** The Procuring Entity is Guyana Power and Light of 40 Main Street Georgetown Guyana South America, Tele #592-226-9598, *Fa x# 592 227-2180 Email: gpersaud@gplinc.com* The Supplier is **Not Applicable** *(indicate full name, legal address, phone, fax and e-mail of Supplier)* **The Subject of procurement is <u>The Supply of Transmission & Distribution Materials / Line Hardware</u>**
3.1	A Performance Security will be required Fourteen (14) days after receipt of notification award in the amount and form of a Bank Guarantee or Manager's Cheque not exceeding ten *(10) percent of the Contract price from a bank registered and operating in Guyana.*
4.1	**Packing** The packing, marking and documentation within and outside the packages shall be: <u>Packing</u> The Supplier shall provide such packing of the Goods as is required to prevent their damage or deterioration during transit to their final destination, as indicated in the Contract. The packing shall be sufficient to withstand, without limitation, rough handling during transit and exposure to extreme temperatures, salt and precipitation during transit, and open storage. Packing case size and weights shall take into consideration, where appropriate, the remoteness of the Goods' final destination and the absence of heavy handling facilities at all points in transit. <u>Marking</u> **Marking shall be in accordance with international practice and shall be agreed with the Procuring Entity. The Goods shall be addressed for delivery to Guyana Power & Light, 40 Main Street,Georgetown,Guyana,South America.**
5.1	**Delivery, Transportation** <u>Documentation</u> (a) For Imported Goods. Within 24 hours of shipment, the Supplier shall notify the Procuring Entity and the Insurance Company by cable or telex or fax or email, the full details of the shipment including Contract number, description of Goods, quantity, the vessel, the bill of lading

	number and date, port of loading, date of shipment, port of discharge, etc. **The Supplier shall mail the following Original documents to the Procuring Entity with a copy to the insurance Company:** (1) Supplier's invoice indicating a description, quantity, unit price of the Goods and sum total; (2) Shipping order, railway receipt or truck receipt; (3) Warranty certificate of Manufacturer or Supplier; (4) Inspection certificate issued by the authorized inspection service, and the supplier's factory inspection report (if any); (5) Certificate of origin; (6) Certificate of conformity; (7) Full set of ocean on-board bills of lading, of air waybills or courier/parcel post Certificates consigned to the Procuring Entity; (8) Packing list identifying contents of each package, and clearly showing Shipping marks and package numbers, kind of package, contents, dimensions and Gross weights of each package in pounds or kilos. The above documents shall be received by the Procuring Entity at least two (2) weeks before arrival of Goods at the port or place of arrival and, if not received, the Supplier will be responsible for any consequent expenses.
6.1	**Payment** The method and conditions of payment to be made to the Supplier under this Contract shall be as follows: **Payment for Goods supplied:** Payment will be as follows: **Advance Payment:** Thirty (30) percent of the value of the each shipment to be delivered shall be paid within thirty (30) days of the signing of the Contract, and upon submission of a claim and a bank guarantee for equivalent amount valid until the Goods are delivered and in the form provided in the bidding documents or another form acceptable to the Procuring Entity. **On Delivery:**

	Fifty (50) percent upon receipt of shipping document of the Contract Price of the Goods shipped shall be paid upon submission of claim (Air Waybill / BL). **On Acceptance:** Twenty (20) percent of the Contract Price of Goods received shall be paid within thirty (30) days of receipt of the Goods supported by the acceptance certificate issued by the Procuring Entity.
9.2	**Liquidated Damages** The liquidated damage shall apply and they shall be equivalent to half of one percent (0.5%) of the delivered price of the delayed Goods or unperformed services per each day of delay or part thereof until actual delivery. The maximum amount of liquidated damages shall be: 15 percent (15 %) of the delayed Goods or services contract price.
11.2	**Settlement of Disputes** The rules of procedure for arbitration proceedings pursuant to GCC Sub-Clause 11.2 shall be as follows: ***(a) Contract with foreign Supplier:*** GCC 11.2 (a) Any dispute, controversy or claim arising out of or relating to this Contract, or breach, termination or invalidity thereof, shall be settled by arbitration in accordance with the UNCITRAL Arbitration Rules as at present in force. ***(b) Contracts with Supplier national of the Procuring Entity's country:*** In the case of a dispute between the Procuring Entity and a Supplier who is a national of the Procuring Entity's country, the dispute shall be referred to adjudication or arbitration in accordance with the laws of Guyana **(c) The Courts of Georgetown, Guyana, shall have exclusive jurisdiction in all the matters arising in the contract including execution of Arbitration Awards**
12.1	**The governing law shall be the law of*:* Guyana**

Schedule of Requirements

IFB # GPL-PD-07-2022

Supply of: Transmission & Distribution Materials / Line Hardware

LOT 1

Item No.	UOM	Description	Quantity	Unit Price	Total Cost
		BOLTS, NUTS, WASHER, RODS			
1	Each	LH004: BOLT & NUT, OVAL EYE 5/8" X 16"	1500		
2	Each	LH005: BOLT& NUT, MACHINE 5/8" X 18"	1800		
3	Each	LH006: BOLT & NUT, MACHINE 5/8" X 12"	15000		
4	Each	LH007: BOLT & NUT, MACHINE 5/8" X 14" GALV	8,000		
5	Each	LH009: BOLT & NUT, EYE 5/8" X 18"	3,000		
6	Each	LH010: BOLT & NUT, MACHINE 5/8" X 16" GALV.	5,150		
7	Each	LH012: BOLT & NUT, 5/8" X 10" MACHINE	10,000		
8	Each	LH014: BOLT, CLEVIS 5/8"X14"	500		
9	Each	LH015: BOLT, D/A EYE 5/8" X 18"	2,000		
10	Each	LH033: BOLT, MACHINE 3/4" X 12"	2,000		
11	Each	LH032: BOLT, MACHINE 3/4" X 22"	1,000		
12	Each	LH034: BOLT, MACHINE 3/4" X 16"	2,700		
13	Each	LH019: BOLT, MACHINE 3/4 X 28"	100		
14	Each	LH021: BOLT, CARRIAGE 3/8" X 5"	20,000		
15	Each	LH023: BOLT, D/A 5/8" X 16"	2,000		
16	Each	LH025: BOLT, D/A EYE 5/8" X 14"	200		
17	Each	LH026: BOLT, D/ARM EYE 5/8" X 16"	200		
18	Each	LH028: BOLT, DOUBLE ARMING 5/8" X 18"	800		
19	Each	LH038: BOLT & NUT, OVAL EYE 5/8" X 14"	200		
20	Each	LH040: BOLT, THIMBLE EYE ANGLE 3/4 X 12"	250		
21	Each	LH041: BOLT, THIMBLE EYE 5/8" X 12"	700		
22	Each	LH042: BOLT, THIMBLE EYE STRAIGHT 3/4 X 12"	200		
23	Each	LH043: BOLT,THIMBLE EYE ANGLE 5/8" X 14"	1,000		
24	Each	LH046: RIDGE PIN	6,000		
25	Each	LH075: ROD, EARTH BOLT EYE 5/8 X 8' DR. HD	12,000		
26	Each	LH076: EYE, THIMBLE ANGLE FOR 5/8"	1,600		
27	Each	LH078: EYENUT, GALV. MILD STEEL OVALEYE	2,000		
28	Each	LH098: PIN, CROSS ARM 1"	30,000		
29	Each	LH102: RACK, 4 SPOOL	200		
30	Each	LH104: ROD, ANCHOR THIMBLEYE 5/8" X 7'	3,600		
31	Each	LH105: WASHER, RD GALV 2" X 13/16"	1,200		
32	Each	LH107: SCREW , F.D. LAG 3/8 " X 3 "	10,000		
33	Each	LH110: WASHER, FLAT SQUARE 3/4"	20,000		
34	Each	LH111: STAPLE, 2" X 5/8" X 0.162"	1,200		
35	Each	LH112: STAPLE, 1" X 5/16" X 0.120"	2,000		

36	Each	LH115: STEP, POLE 5/8 X 10"	66,600		
37	Each	LH122: WASHER, FLAT S.S 1/2"	1,000		
38	Each	LH123: WASHER, CURVED 3/4"	500		
39	Each	LH125: WASHER, CURVED SQUARE 5/8"	2000		
40	Each	LH127: WASHER, ROUND GALV - 3/8"	1,600		
41	Each	LH129: ANCHOR, WRENCH 66"	2,500		
42	Each	LH132: GRIP GAIN WASHER	600		
43	Each	LH137: BOLT & NUT, OVAL EYE 5/8" X 20"	1000		
44	Each	LH138: BOLT & NUT, OVAL EYE 5/8" X 22"	1000		
45	Each	LH139: ANCHOR, WRENCH 96"	4,000		
46	Each	LH044: BRACE , FLATWOOD CROSSARM 32"	14,700		
47	Each	LH108: SHACKLE ANCHOR 4-5/16" x 1"	100		
48	Each	LH117: D/E THIMBLE - DUCTILE	2,000		
49	Each	LH140: ROD, ANCHOR THIMBLEYE 3/4" X 7'	1000		

LOT 2

CLEVIS, GRIPS					
1	Each	LH002: CLEVIS, 3 SPOOL	1500		
2	Each	LH068: CLEVIS , BALL END 52-5	200		
3	Each	LH069: CLEVIS INSULATED	100		
4	Each	LH070: CLEVIS SINGLE SPOOL	10,000		
5	Each	LH074: CLEVIS , DEADEND THIMBLE	1,200		
6	Each	LH082: GRIP DEAD END ALUM PREFORMED COSMOS	5,200		
7	Each	LH084: GRIP #2AWG (35MM)	1,700		
8	Each	LH086: GRIP, PREFORMED 336.4MCM TULIP	12,000		
9	Each	LH087: GRIP, PREFORMED 5/16 INCHES GUYWIRE - 7 WIRES	3,000		
10	Each	LH088: GRIP, PREFORMED NO.4AWG. WIPPET, NEUTRAL NO. 4 AWG.	1,500		
11	Each	LH100: GRIP GUY WIRE 7/16"	4,000		
12	Each	LH101: GRIP 1/0 AWG (50MM) - Poppy	6,000		

LOT 3

CLAMPS, LUGS					
1	Each	LH135: GROUND CLAMP	200		
2	Each	LH047: CLAMP , ANGLE SUSPENSION	100		
3	Each	LH048: CLAMP , STR, STRAIN DEAD END #2 ACSR # 1/7 STR	10,000		
4	Each	LH049: CLAMP, 3/0 -400 CU/AL 397.5	5,000		
5	Each	LH050: CLAMP, 4/0-8 1-4/0 PG	10,000		
6	Each	LH051: CLAMP, 477/500	4,000		
7	Each	LH053: CLAMP, P6 203ACR	2000		
8	Each	LH055: CLAMP, SUSP HAS - 40/86	500		
9	Each	LH056: CLAMP, 397-3/0-500	500		
10	Each	LH057: CLAMP, DEAD END 3/0 - 350	2,500		
11	Each	LH059: CLAMP, HOT LINE 8 SOL - 2/0 STR	6,000		
12	Each	LH060: CLAMP, HOTLINE STIRRUP (BAIL) 336.4MCM	6,000		
13	Each	LH067: CLAMP, HOT LINE #4 / #6	2,000		
14	Each	LH073: DEAD END ASS'Y. 266.8 MCM	200		
15	Each	LH089: LUG CABLE A1 4/0 FOR 1/2 BOLT & 100mm CONDUCTOR	4,000		
16	Each	LH090: LUG, ALUM. 1/0 AWG. POPPY	4,400		
17	Each	LH091: LUG, 1 HOLE 5/8" ALUM. 477 MCM COSMOS	100		
18	Each	LH092: LUG, 2 HOLE - 350MCM	5,000		
19	Each	LH093: LUG, 2 HOLE 4/0	4,000		
20	Each	LH094: LUG, ALUM. COMPR. 266.8 MCM NO.	800		
21	Each	LH095: LUG, ALUM. 2 HOLE COSMOS 477 MCM / 500 MCM	4000		
22	Each	LH096: LUG, HOLD -350MCM	7,500		

LOT 4

LINE HARDWARE					
1	Each	LH003: BAND, ADJUSTABLE 8" X 14" POLE	100		
2	Each	LH133: GROUND WIRE CORNER BAYONET	100		
3	Each	LH134: GROUND WIRE STRAIGHT BAYONET	100		
4	Each	LH131: STRAIN PLATE	600		
5	Each	LH136: CROSS ARM FOR TERMINAL POLE	100		

LOT 5

INSULATORS					
Item No.	**Unit of Measure**	**Description**	**Quantity**	**Unit Price**	**Total Cost**
1.	Each	INSUL01: INSULATOR, PINTYPE 55 - 5 1"	30,000		
2.	Each	INSUL05: INSULATOR, GUY-STRAIN 5 1/2 # 54-3	4,000		
3.	Each	INSUL02: INSULATOR , RACK / SPOOL 53 - 2	2,000		
4.	Each	INSUL04: INSULATOR D/E SURP 15 Kv	17,200		
5.	Each	INSUL12: WIREHOLDER, LARGE 3 1/8" X 2 1/2"	5,400		
6.	Each	INSUL06: INSULATOR, 110KV VERTICAL W/CLAMP TOP POLYMER	200		
7.	Each	INSUL07: INSULATOR, 110KV. HORIZONTAL W/CLAMP TOP POLYMER	120		
8.	Each	INSUL08: Insulator Line Post 110 KV	120		
9.	Each	INSUL09: Insulator Polymer 110 KV - ANSI Ball & Socket	120		
10.	Each	INSUL10: INSULATOR, STRAIN 15KV 1/2" # 54 - 2	2500		
11.	Each	INSUL11: INSULATOR, SUSPENSION 110KV.	120		

LOT 6

FUSES					
Item No.	**Unit of Measure**	**Description**	**Quantity**	**Unit Price**	**Total Cost**
1.	Each	FUSELINK , 20AMP - T	1,600		
2.	Each	FUSELINK, 15AMPS - K	9,900		
3.	Each	FUSE LINK, 3 AMPS -T	1,400		
4.	Each	FUSE LINK, 45 AMP - K	2,600		
5.	Each	FUSE LINK , 75 AMP - K	3,200		
6	Each	FUSE LINK, 10 AMP - K	10,400		
7	Each	FUSE LINK, 100 AMP - K	8,300		
8	Each	FUSE LINK, 20 AMP -K	10,700		
9	Each	FUSE LINK, 200 AMP - K	2,100		
10	Each	FUSE LINK, 25 AMP - K	10,400		
11	Each	FUSE LINK, 3 AMP - K	11,200		
12	Each	FUSE LINK, 40 AMP - K	10,400		
13	Each	FUSE LINK, 50AMP - K	1,000		
14	Each	FUSE LINK, 6 AMP -K	10,400		
15	Each	FUSE LINK, 65 AMP - K	3,200		
16	Each	FUSE LINK, 2 AMP- K	10,700		
17	Each	FUSE LINK, 30 AMP - K	10,400		
18	Each	FUSE LINK, 1 AMP- K	10,400		
19	Each	FUSE LINK, 12 AMPS -K	10,800		
20	Each	FUSE LINK, 6 AMPS -T	600		
21	Each	FUSE LINK, 60 AMPS- T	400		
22	Each	FUSE LINK , 5AMPS - T	1,000		
23	Each	FUSE LINK , 8 AMPS - K	11,200		
24	Each	FUSE LINK, 5 AMPS - K	10,400		
25	Each	FUSE LINK, 60 AMP - K	3,300		
26	Each	FUSE LINK, 80 AMP- K	4,000		

LOT 7

CUTOUTS AND SWITCHES					
Item No.	**Unit of Measure**	**Description**	**Quantity**	**Unit Price**	**Total Cost**
1.	Each	DISTRIBUTION ARRESTOR	6450		
2.	Each	CUT-OUT SWITCH - 200 AMP (STANDARD - NO COMBINATION)	4200		
3.	Each	GANG AIR BREAK	45		
4	Each	TRANSMISSION ARRESTOR	850		
5	Each	CUT-OUT SWITCH - 100 AMP (STANDARD - NO COMBINATION)	14800		
6	Each	SWITCH, DISCONNECT 14.4/15.5KV - 110KV BIL - 600 / 40000A- (SPD)	1050		
7	Each	LH080: FUSEHOLDER, 100 AMPS,	7,000		
8	Each	LH081: FUSEHOLDER, 200 AMPS.	3,000		

LOT 8

CONNECTORS					
Item No.	**Unit of Measure**	**Description**	**Quantity**	**Unit Price**	**Total Cost**
1.	Each	CS001: Connector, Alum -4/0 - 4/0	5,300		
2.	Each	CS002: SLEEVE COMPR SERVICE - HOT	6,000		
3.	Each	CS003: SLEEVE COMPR SERVICE - NEUTRAL	3,000		
4.	Each	CS004: SLEEVE COMPR SERVICE - HOT	6,000		
5.	Each	CS005: SLEEVE COMPR SERVICE - NEUTRAL	2,400		
6.	Each	CS006: SLEEVE, PRE-INSUL, SERVICE	6,000		
7	Each	CS008: CONNECTOR, GROUND 5/8"	8,000		
8	Each	CS015: CONNECTOR ,COMPR 4/0 -3/0	6,000		
9	Each	CS016: CONNECTOR BOX,	6,000		
10	Each	CS017: CONNECTOR,OXLIP 400/500	6,000		
11	Each	CS018: CONNECTOR COMPR TAP 4/0 #1	3,000		
12	Each	CS031: SLEEVE COMPR SERVICE	6,000		
13	Each	CS035: CONNECTOR, SQ ON	6,000		
14	Each	CS037: CONNECTOR, SQ UEEZEON	2,400		
15	Each	CS038: CONNECTOR SQUEEZON	2,400		
16	Each	CS040: CONNECTORS	6,000		
17	Each	CS049: CONNECTOR, 1/0 - 4/0 - 6 AWG. NO. GEB 4/0-6	6,000		
18	Each	CS051: Connector, Alum	6,000		
19	Each	CS060: CONNECTOR, PIERCING TAP 4/0 - 1/0 - 6 AWG.	10,000		
20	Each	CS064: CONNECTOR, OKLIP 250-300 / 6-350	6,000		
21	Each	CS072: CONNECTOR, INSULATOR PIERCING 4/0-1/0AWG	10,000		
22	Each	CS074: SLEEVE ALUM COMPR REPACIT (partridge)	1,000		
23	Each	CS076: Sleeve, Compr. Service - NEUTRAL	3,000		
24	Each	CS077: Sleeve,Compr. Service - NEUTRAL	6,000		
25	Each	CS078: Sleeve,Compr. Service- NEUTRAL	3,000		
26	Each	CS079: SLEEVE, COMPR. 2 - 1STR. AWG	8,000		
27	Each	CS080: SLEEVE COMPR SERVICE PT - NEUTRAL	1,500		
28	Each	CS081: SLEEVE COMPR SERVICE PT- NEUTRAL	4,800		
29	Each	CS082: SLEEVE COMPR SERVICE PT- NEUTRAL	2,000		
30	Each	CS083: SLEEVE COMPR SERVICE PT - HOT	4,800		
31	Each	CS084: SLEEVE COMPR SERVICE - NEUTRAL	1,500		
32	Each	CS085: SLEEVE COMPR SERVICE - HOT	1,000		
33	Each	CS086: SLEEVE COMPR SERVICE - NEUTRAL	1,000		
34	Each	CS087: SLEEVE COMPR SERVICE - NEUTRAL	1,000		
35	Each	CS088: SLEEVE COMPR SERVICE - NEUTRAL	4,800		
36	Each	CS090: SLEEVE COMPR SERVICE - HOT	4,800		
37	Each	CS091: SLEEVE COMPR SERVICE - HOT	6,000		

38	Each	CS092: SLEEVE COMPR SERVICE - HOT	4,800		
39	Each	CS093: SLEEVE COMPR SERVICE - HOT	2,000		
40	Each	CS094: SLEEVE COMPR SERVICE - HOT	2,000		
41	Each	CS095: SLEEVE COMPR SERVICE - HOT	3,000		
42	Each	CS099: SLEEVE TENSION VIZSLA #6AWG	2,000		
43	Each	CS100: SLEEVE, TENSION	3,000		
44	Each	CS108: SLEEVE, PRE-INSUL. SERVICE	4,000		
45	Each	CS112: SLEEVE, PRE-INSUL. SERVICE	2,000		
46	Each	CS113: SLEEVE, PRE-INSUL. SERVICE	2,000		
47	Each	CS114: SLEEVE, PRE-INSUL. SERVICE	2,000		
48	Each	CS125: SLEEVE; PRE-INSUL SERVICE ,	2,000		
49	Each	CS127: SLEEVE; PRE-INSUL SERVICE	7,200		
50	Each	CS128: SLEEVE; PRE-INSUL SERVICE	3,000		
51	Each	CS131: Connector,T - Tap Disconnectable - 2N	1,000		
52	Each	CS132: Connector,T - Tap Disconnectable 2N	2,000		
53	Each	CS133: Connector, Crimp	2,000		
54	Each	CS134: Connector, Crimp	3,800		
55	Each	CS135: Connector, Split Bolt	3,000		

Lot 9

CONDUCTORS					
Item No.	**Unit of Measure**	**Description**	**Quantity**	**Unit Price**	**Total Cost**
1.	Meters	Bare overhead AAC: Poppy	150,000		
2.	Meters	Bare overhead AAC: Tulip	348,030		
3.	Meters	Bare overhead AAC: Oxlip	405,796		
4.	Meters	Bare overhead AAC: Cosmos	625,000		
5.	Meters	Bare overhead AAAC conductor: Canton	90,000		
6.	Meters	Bare overhead ACSR conductor: Partridge	4,000		
7.	Meters	Overhead neutral-supported multiplex conductor: Whippet	250,000		
8.	Meters	Overhead neutral-supported multiplex conductor: Schnauzer	191,000		
9.	Meters	Overhead neutral-supported multiplex conductor: Barnacle	172,000		
10.	Meters	Overhead neutral-supported multiplex conductor: Shrimp	184,000		
11.	Meters	Overhead neutral-supported multiplex conductor: Gammarus	157,688		
12.	Meters	Overhead neutral-supported multiplex conductor: Lepas	661,464		
13.	Meters	Overhead neutral-supported multiplex conductor: Shetland	66,000		
14.	Meters	Guy-wire 5/16' dia: Class B	80,982		
15.	Meters	Guywire 7/16' dia: Class B	82,700		
16.	Meters	Hard drawn bare Copper Conductors: medium-hard drawn	22,350		
17.	Meters	AAC Covered Overhead Conductor: Poppy	46,200		
18.	Meters	AAC Covered Overhead Conductor: Oxlip	45,000		
19.	Meters	AAC Covered Overhead Conductor: Tulip	47,000		
20.	Meters	AAC Covered Conductor: Anona	160,000		

A "Technical Data Schedule" provided in bid document (Appendix 1 "Technical Specifications for Conductors") must be submitted for every conductor listed above.

Kindly complete the above bid requirements including warranty details, delivery schedules in the excel file spreadsheet template provided and submit two copies via email tender box as follows:
(a) a pdf file format and
(b) an excel file format.
The other bid submission requirements are listed below in line with our Evaluation criteria.

BID Delivery Schedule

IFB # GPL-PD-07-2022

Description	Named place of Destination as stated in the bid document	Earliest Delivery Date	Latest Delivery Date	Bidders offered Delivery date (to be specified by the bidder)	Bid Security required
Supply of Transmission & Distribution Materials / Line Hardware	Georgetown Guyana	Immediately after signing of Contract or receipt of Purchase Order	Deliveries of items shall be divided into 4 equal batches. Please see Note below		2 % of Bid Price

Note:

Deliveries of all items shall be divided into 4 equal batches rounded to the nearest whole number (Not exceeding specified bid quantity*) delivered as set out as follows.

- ***1st Delivery: immediately after signing of contract or receipt of P.O to the soonest possible time.***
- ***2nd Delivery: 3months after 1st Delivery***
- ***3rd Delivery: 3months after 2nd Delivery***
- ***4th Delivery: 3months after 3rd Delivery.***
- ***The statement about "closest allocations" refers to quantities of items that cannot be equally divided into four equal parts, e.g. If the quantity of a particular item is 13, then there will have to be 3 supplies of 3 (quantity) and 1 of 4 (quantity) since 13/4=3.25***

Please note for 2nd, 3rd and 4th shipments /deliveries, this must comply with the schedule above.

QUALIFICATION INFORMATION

1. **For individual bidders or individual members of a joint venture**

1.1 Legal status of Bidder *(attach copy).*
Place of registration: _____
Principal kind of business: _____
Power of attorney for signing the Bid *(attach).*

1.2 Total volume of supplies executed for the last three (3) years in Guyana dollars or currency of bid:
_____ in 20___.
_____ in 20 ___.
_____ in 20 ___.

1.3 Supplies of a similar nature executed by the Supplier during the last two years *(not less than three (3) supplies)*

№	**Name of Goods**	**Name of Clients, address and telephone**	**Contract Price**

1.4 Copies of financial reports for the last three years *(balance sheets, loss and profit statements, auditors' reports, etc.).List below and attach copies.*

_____
_____
_____

a. Evidence of access to financial resources *(cash in hand, lines of credit, overdraft facility etc.).List below and attach copies of supporting documents.*

_____
_____
_____

b. Evidence of compliance with NIS, IRD and TIN Certificate and VAT Registration for Vatable item/s. *(attach supporting documents).*

_____
_____
_____

c. Information on all claims, arbitration or other legal proceedings currently being examined or already settled.

_____

_____

_____

2.0 Any other information required by the Procuring Entity to execute the Contract _____

2.1 The Supplier certifies that he meets all the qualification criteria and requirements, in accordance with normative legal documents.

I certify the authenticity of all the above information.

_____	_____	_____
(Full name)	(Title)	(Signature and seal)

Dated on: _____ day of _____ 20__.
(Date)

SUPPLIER'S BID

Date: _____
IFB No: _____

TO: _____
(Name and address of Procuring Entity)

Dear Sir / Madam,

Having examined the bidding documents, including the Annexes and Addenda No _____ *[specify number]*, the receipt of which is hereby acknowledged, we, the undersigned, offer to supply and provide _____ *[description of goods and related services]* in accordance with the requirements of the bidding documents to the total sum of _____ *[Total Amount of Bid in Words and Figures]*, confirmed by the attached Price Schedule which is a part of this Bid.

(a) We, including all subcontractors, regarding any part of the Contract, in accordance with the bidding documents, have no conflict of interests pursuant to sub clause 2 (i) of the Instructions to Bidders;

(b) We, including all subcontractors, regarding any part of the Contract, in accordance with the bidding documents, have not been declared by the [authorized State body] [National Board] on procurement to be ineligible, or are not ineligible, in accordance with the legislation of Guyana.

We undertake, if our Bid is accepted, to supply the Goods, in accordance with a delivery schedule given in the Schedule of Requirements.

If our Bid is accepted, we undertake to furnish the Performance security in the form of _____ to the amount of _____, comprising _____% of the Contract Price in order to execute the Contract properly and within the time period(s) specified in the Bidding Documents.

We hereby confirm that this bid shall be valid during _____ days starting from the date established for bid opening, and it shall be binding until the expiry of the indicated period.

Prior to the preparation and execution of a formal Contract, this Bid together with your written confirmation of its acceptance shall form a binding Contract on the parties.

We understand that you are not bound to accept the lowest or any bid you receive.

Dated _____.

Duly authorized to sign the Bid _____
(*Name of Supplier*)

Supply Contract

THIS CONTRACT made the _____ day of _____ 20__

Between _____ [name of Procuring Entity] (hereinafter referred to as "the Procuring Entity"), on the one hand, and_____ [name of Supplier] from _____ [city and country of Supplier] (hereinafter referred to as "the Supplier"), on the other hand have come to an Agreement on the following:

The Procuring Entity has announced bid for procurement of goods and services, namely _____[brief description of goods and related services] and has accepted the Supplier's bid for the supply of indicated goods and services to the sum of _____[Contract Price in words and figures] (hereinafter referred to as "the Contract Price").

THIS CONTRACT WITNESSES AS FOLLOWS:

1. In this Contract, the terms and expressions have the same meanings as are respectively assigned to them in the Conditions of Contract referred to.

2. The following documents shall form the Contract and shall be deemed its integral part, viz.:
   (a) Procuring Entity's Notification of Award;
   (b) Bid and Price Schedule submitted by Bidder;
   (c) Schedule of Requirements;
   (d) Technical Specifications;
   (e) General Conditions of Contract;
   (f) Special Conditions of Contract;
   (g) Other documents included in the Contract documents;

3. This Contract shall prevail over all other Contract documents. In the event of any discrepancy or inconsistency within the Contract documents, then the documents shall prevail in the order listed above.

4. In consideration of the payments to be made by the Procuring Entity to the Supplier as hereinafter mentioned, the Supplier hereby covenants with the Procuring Entity to provide the Goods and Services, and remedy defects therein in conformity in all respects with the provisions of the Contract.

5. The Procuring Entity hereby agrees to pay the Supplier in consideration of the delivery of the Goods and Services and the remedying of defects therein, the Contract Price or such other sum as may become payable under the provisions of the Contract at the times and in the manner prescribed by the Contract

IN WITNESS of the foresaid, the parties hereto have caused this Contract to be executed

in accordance with the legislation of Guyana the day and year first above written in the beginning of the document.

For and on behalf of the Procuring Entity:

Signed by _____

Witnesses:

1._____

2._____

For and on behalf of the Contractor:

Signed by_____

Witnesses:

1._____

2._____

BID SECURITY
(Bank Guarantee)

Whereas _____ *[name of Bidder]* (hereinafter referred as "the Bidder") is ready to submit his bid dated _____ *[date of bid submission]* for the supply _____*[name and/or description of goods]* (hereinafter referred as "the Bid"),

KNOW ALL PEOPLE, that WE _____ *[name of Bank]* from _____ *[name of country]*, having our registered office at the address _____ *[address of Bank]*, (hereinafter referred as "the Bank"), are bound to _____ *[name of Procuring Entity]* to the sum of _____, by which payment to the indicated Procuring Entity shall be made in whole and in a timely manner; the Bank is bound on behalf of its name, its successors and authorized persons. This is to confirm that the license issued to the Bank shall provide for activity on issuance of the guarantee, and the person(s) signing that guarantee is entitled to act on behalf of the Bank, and if the approval of Board of Directors, or of General Stockholders Meeting is required, it is already received and there is no other approval required.

THE CONDITIONS of this obligation are as follows:

1. If the Bidder:
   (a) Withdraws his Bid during the period of bid validity specified by the Bidder on the Form of Bid; or
2. If the Bidder having received notice from the Procuring Entity that his bid is accepted within the period of bid's validity:
   (a) fails or rejects to sign the Contract at the request of; or
   (b) fails or rejects to furnish the performance security in accordance with the Instructions to Bidders;

We undertake to pay the Procuring Entity the above sum upon receipt of his first written request, without needing the Procuring Entity to show grounds or reasons of that request, provided that the sum requested by the Procuring Entity is due to him because of the occurrence of one or two or both conditions, specifying the condition or conditions occurred.

This guarantee shall remain in force during _____ days inclusive following the expiry of the bid validity period, and any request in respect thereof should reach the Bank not later than the abovementioned date.

_____	_____	_____
(Full name of Bank's representative)	*(Title)*	*(Signature and seal)*

Dated on «____» day of _____20__.

Bid-Securing Declaration – (*Not Applicable)*

[The Bidder shall fill in this Form if applicable pursuant to BDS.]

Date:_____
IFB No.:_____
Alternative No.:_____

To: _____

We, the undersigned, declare that:

1. We understand that, according to your conditions, bids must be supported by a Bid-Securing Declaration.

2. We accept that we will automatically be suspended from being eligible for bidding in any contract with the Procuring Entity for the period of time of _____*[insert number of months or years]* starting on _____*[insert date]*, if we are in breach of our obligation(s) under the bid conditions, because we:

(a) have withdrawn our Bid during the period of bid validity specified by us in the Bidding Data Sheet; or

(b) having been notified of the acceptance of our Bid by the Procuring Entity during the period of bid validity, (i) fail or refuse to execute the Contract, if required, or (ii) fail or refuse to furnish the Performance Security, in accordance with the ITB.

3. We understand this Bid Securing Declaration shall expire if we are not the successful Bidder, upon the earlier of (i) our receipt of a copy of your notification of the name of the successful Bidder; or (ii) twenty-eight days after the expiration of our Bid.

4. We understand that if we are a Joint Venture, the Bid Securing Declaration must be in the name of the Joint Venture that submits the bid. If the Joint Venture has not been legally constituted at the time of bidding, the Bid Securing Declaration shall be in the names of all future partners as named in the letter of intent.

Signed: _____*[insert signature of person whose name and capacity are shown]* In the

capacity of _____*[insert legal capacity of person signing the Bid Securing Declaration]*

Name: _____*[insert complete name of person signing the Bid Securing Declaration]*

Duly authorized to sign the bid for and on behalf of: *[insert complete name of Bidder]*

Dated on _____ day of _____, _____ *[insert date of signing]*

Manufacturer's Authorization

[The Bidder shall require the Manufacturer to fill in this Form in accordance with the instructions indicated. This letter of authorization should be on the letterhead of the Manufacturer and should be signed by a person with the proper authority to sign documents that are binding on the Manufacturer. The Bidder shall include it in its bid, if so indicated in the ***BDS.****]*

Date of Bid Submission*(day/ month/ year):*
IFB No:*[insert number of bidding process]*
Alternative No.:[*insert identification No if this is a Bid for an alternative]*

To: _____ *[insert complete name of Procuring Entity]*

WHEREAS

We _____ *[insert complete name of Manufacturer],* who are official manufacturers of _____*[insert type of goods manufactured],* having factories at _____ [insert full address of Manufacturer's factories], do hereby authorize _____ *[insert complete name of Bidder]* to submit a bid the purpose of which is to provide the following Goods, manufactured by us _____*[insert name and or brief description of the Goods],* and to subsequently negotiate and sign the Contract.

We hereby extend our full guarantee and warranty in accordance with Clause 1.3 of the General Conditions of Contract, with respect to the Goods offered by the above firm.

Signed: _____*[insert signature(s) of authorized representative(s) of the Manufacturer]*

Name:_____ *[insert complete name(s) of authorized representative(s) of the Manufacturer]*

Title:_____ *[insert title]*

Duly authorized to sign this Authorization on behalf of: _____*[insert complete name of Bidder]*

Dated on _____ day of _____, 20____ *[insert date of signing]*

PERFORMANCE SECURITY
(Bank Guarantee)

TO: _____
[Name of Procuring Entity]

WHEREAS _____*[name of the Supplier]* (hereinafter called "the Supplier") has undertaken, in accordance with the Contract No. _____*[Contract number]* dated _____ 20__ to supply _____*[description of Goods and Services]* (hereinafter called "the Contract"),

AND WHEREAS it has been stipulated by you in the said Contract that the Supplier shall furnish you with a Bank Guarantee by a reputable bank to the sum specified therein as a security for compliance with the Supplier's obligations under the Contract,

AND WHEREAS we have agreed to furnish the Supplier with a security,

THEREFORE WE hereby confirm that we are the Guarantors and are responsible to you on behalf of the Supplier, up to a total of _____*(amount of security in words and figures)* and, we undertake to pay you, on your first request notifying of the Supplier's default with the Contract, and without cavil or argument, any sum or sums within the above limits, as aforesaid, without your needing to show grounds or reasons of your request or the sum specified therein.

Any modification or addition, or amendment in the terms of Contract, which may be made by the Procuring Entity and the Supplier by Additional Agreement shall in no way release us from obligations under the Guarantee, and we waive any notice of modification, addition, or amendment. This guarantee shall be valid until full completion of the Contract Conditions by the Supplier. Also, we confirm that the license issued to the Bank shall provide for activity on issuance of a bank guarantee, and the person signing the guarantee is entitled to act on behalf of the Bank, and if the approval of Board of Directors or of General Stockholders Meeting is required, it is already received, and there is no other approval required

This guarantee shall be valid till the _____day of _____ 20__.

_____
_____ _____ (Full name of Bank's representative) (Title) (Signature and seal)

Dated on _____ day of _____20__

Address of the Bank issuing guarantee: _____

Letter of Acceptance

(Letterhead paper of Procuring Entity)

Date: _____

To: _____

(Name of Supplier)

_____

(Address of Supplier)

We hereby notify you that your bid dated the _____ day of _____20__, for the supply of goods _____ (*description of goods*) up to a total of_____

(Amount in figures and words)

as amended and modified in accordance with the Instructions to Bidders is hereby accepted by our agency.

Simultaneously, we send you the Form of Contract and request you, pursuant to Clause 20.1 of the Instructions to Bidders, during seven (7) days to sign and date the Form of Contract, and return it at our address. Jointly with the signed Contract, we request you to furnish the performance security, in accordance with ITB Clause 20.2.

You hereby entrusted to start supply of the Goods, in accordance with the terms and conditions of a Contract.

Name of agency _____

Full name and Title _____

Signature of Authorized Representative_____

Power of Attorney

TO: _____ *[name of Procuring Entity]*

WHEREAS _____ *[name of Supplier]*, who is the Supplier _____ *[name and/or description of goods]*.

do hereby authorize _____ *[name and address of Supplier's Representative]* to submit the Bid, and sign the Contract based on I*nvitation for Bids* for the abovementioned goods to be supplied by us, and

_____

[Full name, title, signature for and on behalf of Supplier]

Dated on «_____» day of _____20__ (Seal)
(Date)

_____

Note: The power of attorney must be drafted on a letterhead paper of the Supplier, and signed by a competent person authorized by the Supplier. The Bidder shall include this power of attorney in his Bid.

Bank Guarantee for Advance Payment

TO _____
[Name Procuring Entity*]*
[Name of Contract] _____

We, _____*[name of Bank]* in accordance with the conditions of Contract which provide for advance payment (*name and address of the Supplier*), and whereas the Supplier has undertaken to provide you a Bank guarantee for advance payment to the Procuring Entity.

THEREFORE WE hereby affirm that we are the Guarantors, and are responsible to you on behalf of the Supplier to a total sum _____ GYD (*amount of guarantee in figures and words*), and we undertake to pay you on your first request and without objection on our part, and without the preliminary address to the Supplier, any sum or sums within the above limits.

We also agree that no alteration or addition in the terms of Contract which is subject to implementation, or any other contract documents which may be made by the Purchaser and the Supplier shall release us from obligations under the guarantee, and we hereby waive any notice of such alteration, or addition. We confirm that the license issued to the Bank shall provide for activity on issuance of a bank guarantee, and the person signing the guarantee is entitled to act on behalf of the Bank, and if the approval of Board of Directors or of General Stockholders Meeting is required, then it is already received, and there is no other approval required.

This guarantee shall be valid and remain in force from the date of advance payment received by the Supplier under the Contract, and until the date when the Procuring Entity receives delivery of the Goods in the amount of Advance Payment.

The Advance Payment referred to above must be received by the Supplier in its account number _____*[insert account number]* at _____*[insert name and address of Bank]*.
This guarantee shall expire, at the latest, upon our receipt of the Goods equivalent to the amount of the Advance Payment, or on the_____*[insert date]*, whichever is later. Consequently, any demand for payment under this guarantee must be received by us at this office on or before that date.

_____ _____ _____
(Full name of Bank's representative) (Title) (Signature and seal)

Dated on _____ day of _____20__.

Address of the Bank issued the guarantee: _____

Evaluation Criteria

The Procuring Entity's evaluation of bid will take into account, in addition to the Bid Price the following:
Phase 1 of Evaluation – Mandatory Requirements

Item #	**Mandatory Requirements** –*Completeness of Document*	**Responsive**
	Must Conform to applicable Administrative Compliances	
1	Submission of Valid Company Registration	
2	Submission Of Valid Certificate Of Compliance – GRA (only applies to suppliers whose registered business address is within Guyana)	
3	Submission of valid certificate of compliance – NIS (only applies to suppliers whose registered business address is within Guyana)	
4	Copies of financial reports for the last three years	
5	Validity Of Bid – Including Documents that are properly signed	
7	Manufacture Authorization	
8	Bids Should Be valid for Ninety (90) Days	
9	Record of Past Experience for Supplies of similar nature	
10	Price and Delivery Schedule	
11	Technical Specification – Compliance, completeness, legible, unambiguous	
12	Country of Origin	

Note: Bids which do not comply with the mandatory requirements will <u>NOT</u> be considered for detailed Evaluation.

Bid that passes the mandatory requirements will be evaluated in detailed with points awarded as follows. The Bid that attracts the most points will be recommended.

Lack of submission of supplier's technical specification confirming to GPL's technical requirements shall be construed as non-compliance.

Phase 2 Detailed Evaluation Criteria

Category	Criteria	Max Points	Evaluation Formula
Delivery Time	Immediate Delivery or Earliest possible Time After signing Contract or receipt of Purchase Order (1st Batch / Shipment)	15	*Least Bid Delivery Time/Bid Delivery Time*15*
	Delivery, 3 Months After receipt of first delivery. (2nd Batch / Shipment)	10	*Least Bid Delivery Time/Bid Delivery Time*10*
	3 Months After receipt of second delivery. (3rd Batch / Shipment)	10	*Least Bid Delivery Time/Bid Delivery Time*10*
	Delivery, 3 Months After receipt of third delivery (4th Batch/ Final Shipment)	10	*Least Bid Delivery Time/Bid Delivery Time*10*
Warranty and Guarantee	Warranty Period.	10	The Bid that offers the maximum Warranty. *The bidder's Warranty Period / The Bidder's Offering the Maximum Warranty * 10*
Cost	The Bid that offers the lowest cost shall be considered as the best option.	45	*Lowest Bid Price / Bid Price*45*
Total	Accumulated	100	

NOTES ON EVALUATION

(a) The evaluation will be done per lot.

(b) The Contract would be awarded to the Bidder whose bid is determined to be substantially technically responsive to the Bid Document per lot or multiple lots or all lots and who has offered the lowest evaluated Bid Price (bid with highest points awarded for each respective lot)

(c) ***A penalty of immediate rejection of a bid or termination of contract will be applied upon discovery of misrepresentation of information.***

(d) Bids for partial lot (s) will not be considered

A penalty of 0.5% of the value of the order (or any portion thereof) for every completed calendar day that the products exceed the promised delivery period, to a maximum of 15% of the value of the order (or any portion thereof).

A penalty of immediate rejection of a bid or termination of contract will be applied upon discovery of misrepresentation of information

Law of Guyana: Procurement Act 2003

Section 39 – Subsection 6 (b)

(b) The procuring entity may grant a margin of preference not exceeding ten percent to tenders submitted by domestic contractors or for the benefit of tenders for domestically produced goods, provided that such preference is specified in the tender documents. If the lowest evaluated tender was submitted by a foreign tenderer, the evaluating committee will apply the margin of preference to the prices submitted by all foreign tenderers, for evaluation purpose. If, after applying the margin of preference, the lowest evaluated tender was submitted by a domestic tenderer, such tenderer shall be awarded the contract. Otherwise, the foreign tenderer who has submitted the lowest evaluated tender shall be awarded the contract.

Appendix I

Technical Specification for Line Hardware

1.0 Glossary

AWG	*American wire gauge*
GPL	*Guyana Power and Light Incorporated*

2.0 Scope

This specification sets out the technical requirements for line hardware materials to be used on distribution andtransmission networks. Rated up to 69, 000 kV.

3.0 Environmental Conditions

3.1 The line hardware materials will be exposed to the following environmental conditions:

a. Maximum altitude above mean sea level less than 1,000 m;
b. Maximum ambient air temperature 40^0C;
c. Maximum daily average ambient air temperature 30^0C;
d. Minimum ambient temperature15^0C; and
e. Maximum relative humidity 100%.

3.2 The line hardware materials shall be designed and protected for use in exposed, heavily polluted, and salty,corrosive, and humid tropical coastal atmospheric conditions.

4.0 Requirements

4.1 The requirements for the line hardware materials will be listed in the following order

Item#	Description
LH001	BOLT, OVAL EYE 5/8 X12
LH002	CLEVIS, 3 SPOOL
LH003	BAND, ADJUSTABLE 8" X 14" POLE
LH004	BOLT & NUT, OVAL EYE 5/8 X 16
LH005	BOLT& NUT, MACHINE 5/8 X 18
LH006	BOLT & NUT, MACHINE 5/8" X 12"
LH007	BOLT & NUT, MACHINE 5/8" X 14" GALV
LH008	BOLT & NUT, CARRIAGE 3/8" X 4 1/2"
LH009	BOLT & NUT, EYE 5/8" X 18"
LH010	BOLT & NUT, MACHINE 5/8" X 16" GALV.
LH011	BOLT , D/A GALV 5/8 X 10"
LH012	BOLT & NUT, 5/8 X 10 MACHINE
LH013	BOLT, EYE GALV 5/8" X 6 1/2"

as shown in the tablebelow:

LH014	BOLT, CLEVIS 5/8X14
LH015	BOLT, D/A EYE 5/8" X 18"
LH016	BOLT MACHINE 5/8 x 24 long
LH017	BOLT, MACH 3/4 X 20"
LH018	BOLT, MACHINE 3/4" X 24"
LH019	BOLT, MACHINE 3/4 X 28"
LH020	BOLT, OVAL EYE 5/8 X 6
LH021	BOLT, CARRIAGE 3/8" X 5"
LH022	BOLT, D/A EYE 5/8 X 20:
LH023	BOLT, D/A 5/8" X 16"
LH024	BOLT, D/A 5/8 X 22"
LH025	BOLT, D/A EYE 5/8 14" -
LH026	BOLT, D/ARM EYE 5/8" X 16"
LH027	BOLT, DOUBLE ARMING 5/8 X 20"
LH028	BOLT, DOUBLE ARMING 5/8" X 18"
LH029	BOLT, EYE 10 X 5/8 GALV
LH030	BOLT, MACH 5/8 X 22"
LH031	BOLT, MACHINE 5/8 X 28"
LH032	BOLT, MACHINE 3/4 X 22”
LH033	BOLT, MACHINE 3/4" X 12"
LH034	BOLT, MACHINE 3/4" X 16"
LH035	BOLT, MACHINE 3/4" X 18"
LH036	BOLT, MACHINE 3/4" X 26"
LH037	BOLT, MACHINE GALV 3/4" X 14
LH038	BOLT & NUT, OVAL EYE 5/8 X 14"
LH039	BOLT, OVALEYE 5/8" X 8"
LH040	BOLT, THIMBLE EYE ANGLE 3/4 X 12"
LH041	BOLT, THIMBLE EYE 5/8" X 12"
LH042	BOLT, THIMBLE EYE STRAIGHT 3/4 X 12"
LH043	BOLT,THIMBLE EYE ANGLE 5/8" X 14"
LH044	BRACE , FLATWOOD CROSSARM 32"
LH045	BRACE, CROSSARM 26"
LH046	RIDGE PIN
LH047	CLAMP , ANGLE SUSPENSION
LH048	CLAMP , STR, STRAIN DEAD END #2 ACSR # 1/7 STR
LH049	CLAMP, 3/0 -400 CU/AL 397.5
LH050	CLAMP, 4/0-8 1-4/0 PG
LH051	CLAMP, 477/500
LH052	CLAMP, BAIL 336.4MCM STIRRUP
LH053	CLAMP, P6 203ACR
LH054	CLAMP Parallel Groove (**2 Bolt)**

LH055	CLAMP, SUSP HAS - 40/86
LH056	CLAMP, 397-3/0-500
LH057	CLAMP, DEAD END 3/0 - 350

LH058	CLAMP, 3 BOLT GUY
LH059	CLAMP, HOT LINE 8 SOL - 2/0 STR
LH060	CLAMP, HOTLINE STIRRUP (BAIL) 336.4MCM
LH061	CLAMP, STIRRUP 477 MCM NO.
LH062	CLAMP, STRAIN GUY 4" x 1 9/16"
LH063	CLAMP, HOT LINE 8 SOL - 2/0 STR
LH064	CLAMP,BURNDY
LH065	CLAMP, 3/0-4/0
LH066	CLAMP, 3 BOLT GUY
LH067	CLAMP, HOT LINE #4 / #6
LH068	CLEVIS , BALL END 52-5
LH069	CLEVIS INSULATED
LH070	CLEVIS SINGLE SPOOL
LH071	CLEVIS SOCKET
LH072	CLIP WIRE ROPE 5/8
LH073	DEAD END ASS'Y. 266.8 MCM
LH074	CLEVIS , DEADEND THIMBLE
LH075	ROD, EARTH BOLT EYE 5/8 X 8' DR. HD
LH076	EYE, THIMBLE ANGLE FOR 5/8"
LH077	EYENUT, THIMBLE 5/8"
LH078	EYENUT, GALV. MILD STEEL OVALEYE
LH079	FUSEHOLDER, 300 AMP
LH080	FUSEHOLDER, 100 AMPS,
LH081	FUSEHOLDER, 200 AMPS.
LH082	GRIP DEAD END ALUM PREFORMED COSMOS
LH083	GRIP PREFORMED 4/0 AWG (100MM2)
LH084	GRIP #2AWG (35MM)
LH085	GRIP, CABLE # 4 SS BALL & CLAMP
LH086	GRIP, PREFORMED 336.4MCM TULIP
LH087	GRIP, PREFORMED 5/16 INCHES GUYWIRE - 7 WIRES
LH088	GRIP, PREFORMED NO.4AWG. WIPPET, NEUTRAL NO. 4 AWG.
LH089	LUG CABLE A1 4/0 FOR 1/2 BOLT & 100mm CONDUCTOR
LH090	LUG, ALUM. 1/0 AWG. POPPY
LH091	LUG, 1 HOLE 5/8" ALUM. 477 MCM COSMOS
LH092	LUG, 2 HOLE - 350MCM
LH093	LUG, 2 HOLE 4/0
LH094	LUG, ALUM. COMPR. 266.8 MCM NO.
LH095	LUG, ALUM. 2 HOLE COSMOS 477 MCM / 500 MCM
LH096	LUG, HOLD -350MCM
LH097	CLAMP, PG 3 BOLT FT12.7-20.1

LH098	PIN, CROSS ARM 1"
LH099	PIN, POLE TOP 20" x 1"
LH100	GRIP GUY WIRE 7/16"
LH101	GRIP 1/0 AWG (50MM) - Poppy

LH102	RACK, 4 SPOOL
LH103	ANCHOR RODS TWIN EYE 5/8" X 8'
LH104	ROD, ANCHOR THIMBLEYE 5/8" X 7’
LH105	WASHER, RD GALV 2" X 13/16"
LH106	HOOKS, SAFETY
LH107	SCREW , F.D. LAG 3/8 " X 3 "
LH108	SHACKLE ANCHOR 4-5/16" x 1"
LH109	SOCKET , BALL END
LH110	WASHER, FLAT SQUARE 3/4"
LH111	STAPLE, 2" X 5/8" X 0.162”
LH112	STAPLE, 1" X 5/16” X 0.120”
LH113	STAPLE, 1" X 3" X 1.20 -
LH114	STEP DETACHABLE POLE
LH115	STEP, POLE 5/8 X 10"
LH116	TAPE DENSOPOL
LH117	D/E THIMBLE - DUCTILE
LH118	BOLT, U 5/8" X 15" WIDE
LH119	UNIVERSAL ROLLER
LH120	-
LH121	WASHER, 3/4" X 11/16" ROUND 5/8
LH122	WASHER, FLAT S.S 1/2"
LH123	WASHER, CURVED 3/4"
LH124	WASHER, CONIC 1/2"
LH125	WASHER, CURVED SQUARE 5/8"
LH126	WASHER, FLAT SQ # 6812 2" X 2" X 11/16 X 1/8 - 5/8"
LH127	WASHER, ROUND GALV - 3/8"
LH128	WASHER, SPLIT S.S 1/2"
LH129	ANCHOR, WRENCH 66"
LH130	PIN, LONG SHANK - 1" THREAD X 11-1/2" LENGTH
LH131	STRAIN PLATE
LH132	GRIP GAIN WASHER
LH133	GROUND WIRE CORNER BAYONET
LH134	GROUND WIRE STRAIGHT BAYPNET
LH135	GROUND WIRE CLAMP
LH136	CROSS ARM FOR TERMINAL POLE
LH137	BOLT & NUT, OVAL EYE 5/8 X 20
LH138	BOLT & NUT, OVAL EYE 5/8 X 22
LH139	ANCHOR, WRENCH 96"
LH140	ROD, ANCHOR THIMBLEYE 3/4" X 7’

4.2 Oval Eye Bolts 5/8: LH001, LH004, LH009, LH013, LH137, LH138

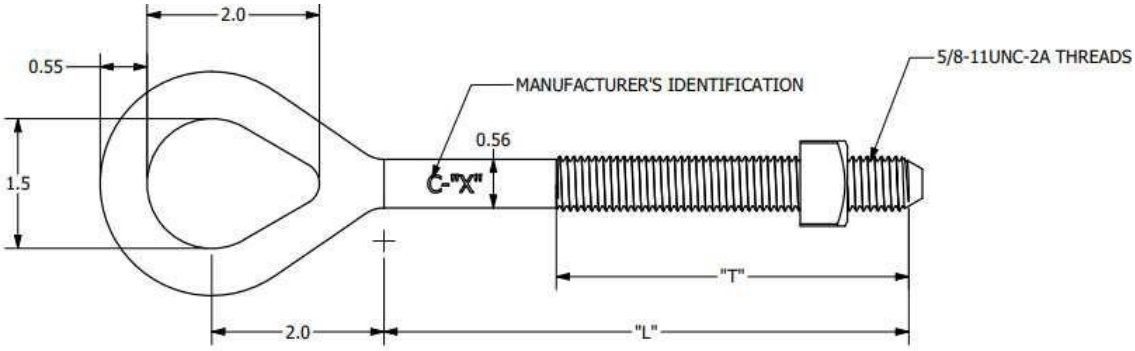

General

Coating	Galvanized, ASTM A-153
Material	Steel
Tensile Strength	12400 lb

Dimensions

Diameter	0.63 in
Diameter (Fraction)	5/8 in

Item #	Length (L) in	Length – Threaded Area (T) in
LH001	12	6
LH004	16	6
LH009	18	6
LH013	6	4
LH038	14	6
LH039	8	4
LH137	20	6
LH138	22	6

4.3 LH002: CLEVIS, 3 SPOOL

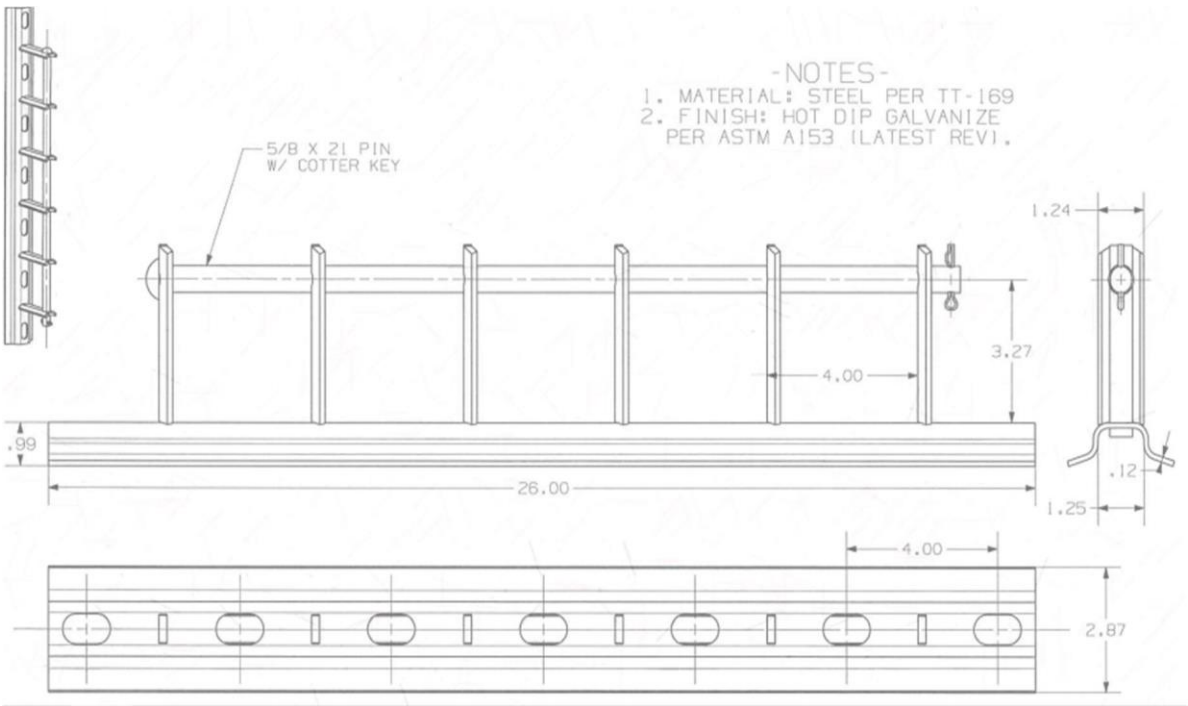

General

Coating	Galvanized, ASTM A-153
Material	Steel
Style	3 Wire

Dimensions

Length	26.00 in
Weight	6.9 lb
Width	2.88 in

4.4 : LH003: BAND, ADJUSTABLE 8" X 14" POLE

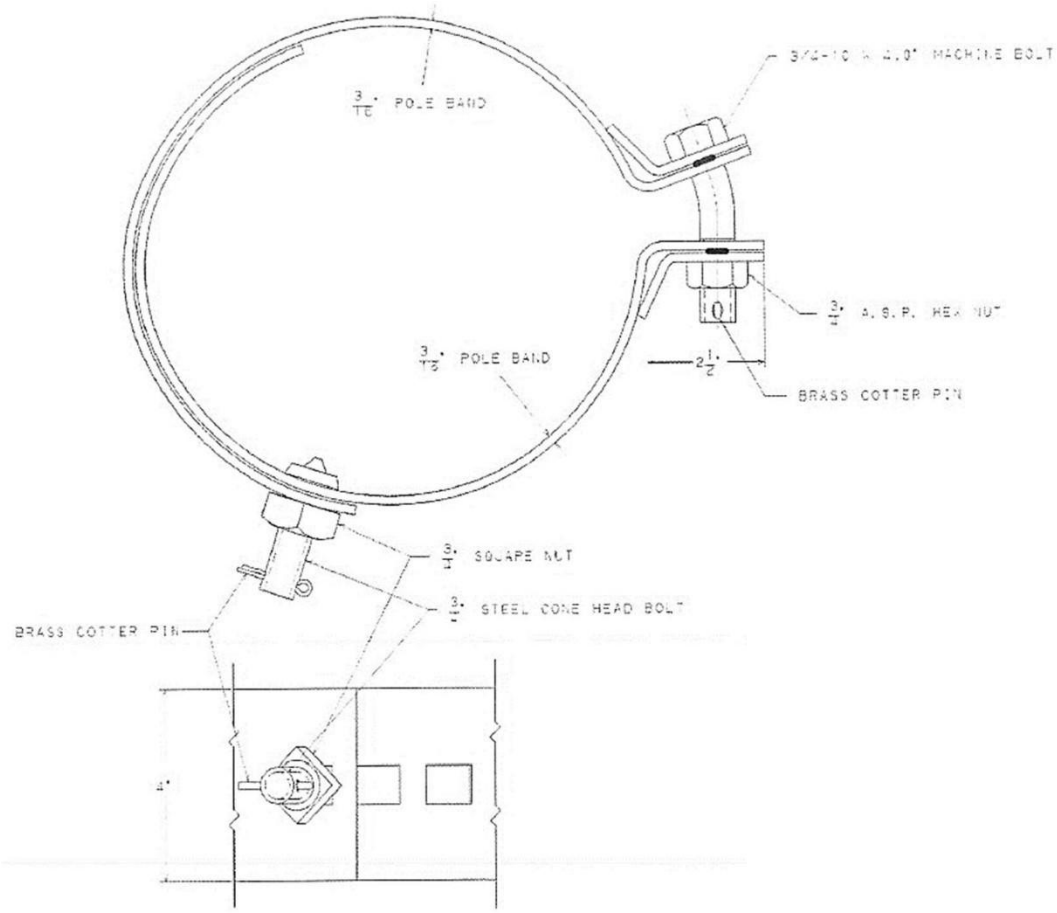

General

Coating

Galva

nized, ASTM A-153

Material Steel

Adjustable Pole Band must

- Fits pole diameters from 8" to 14" poles (as per GPL Specification DS010 wood poles & woodproducts),
- Is 3 /16" x 4" flat steel bands,
- Assembled with one 3/4" x 4" curved bolt,
- 3/4" x 2 1/2" cone head bolt.

4.4 Machine Bolts 5/8: LH005, LH006, LH007, LH010, LH012, LH016, LH030 and LH031

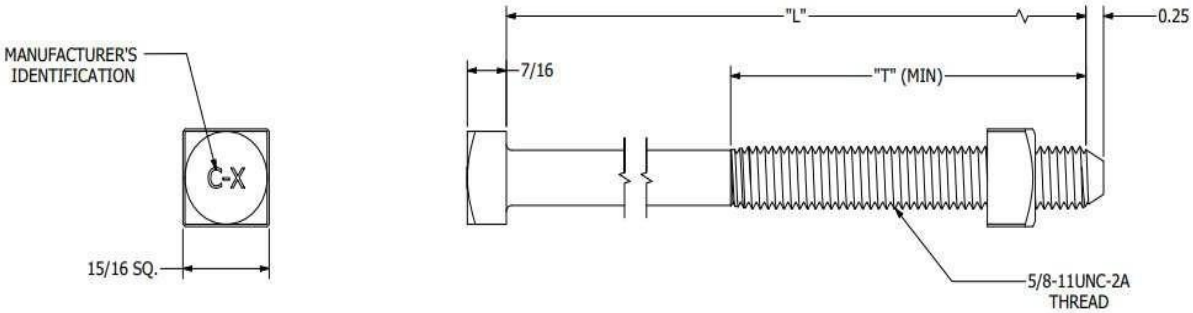

Item #	Dimension (in.)	
	"L"	"T"
LH005	18	6
LH006	12	6
LH007	14	6
LH010	16	6
LH012	10	6
LH016	24	6
LH030	22	6
LH031	28	6

General

Coating	Galvanized, ASTM A-153
Material	Steel
Tensile Strength	Strength and Dimension per ANSI/IEE C135.1

4.5 Carriage Bolts 3/8”: LH008 and LH021

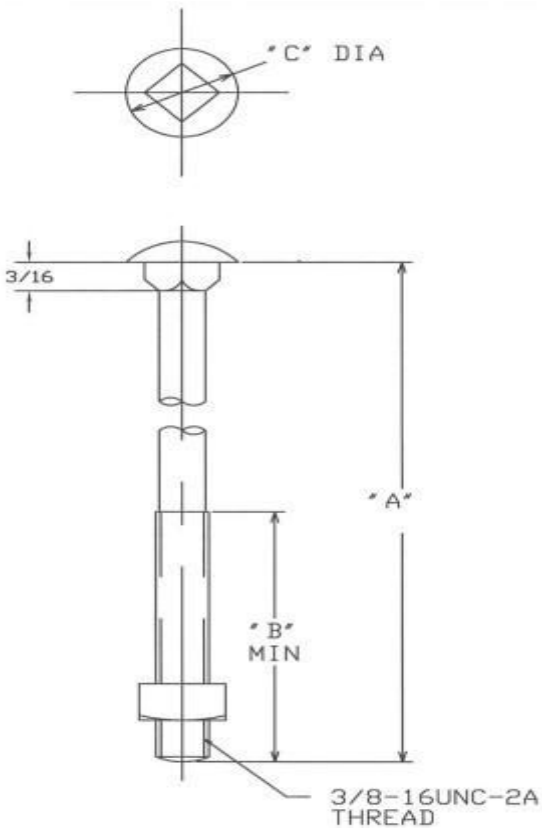

General

Coating	Galvanized, ASTM A-153
Material	Steel
Min. Tensile Strength	4250 lb

Item #	Dimension (ins.)		
	A	B	C
LH008	4-1/2	3	0.81
LH021	5		

4.6 Double Arming Galvanised Bolt 5/8”: LH011, LH023, LH027 and LH028

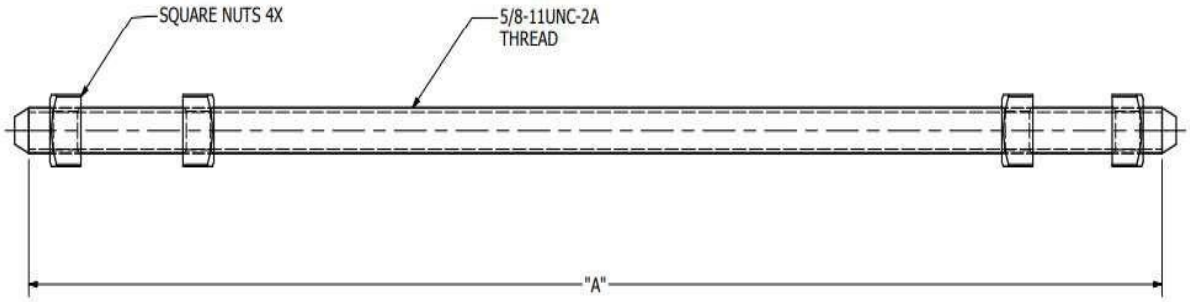

General

Coating	Galvanized, ASTM A-153
Material	Steel
Tensile Strength	12400 lb

Item #	Dimensions (ins) “A”
LH011	10
LH023	16
LH027	20
LH028	18

4.7 LH014: BOLT, CLEVIS 5/8X14

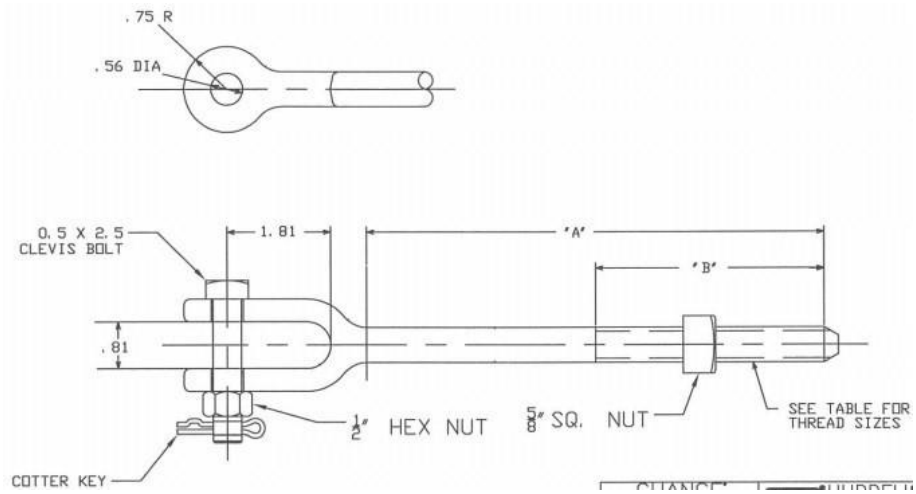

General

Coating	Galvanized, ASTM A-153
Material	Steel
Min. Tensile Strength	12400 lb

Dimensions

Diameter	0.63 in
Diameter (Fraction)	5/8 in
Length	14.00 in
Length - Threaded Area	6

4.8 Machine Bolts ¾: LH017, LH018 and LH019

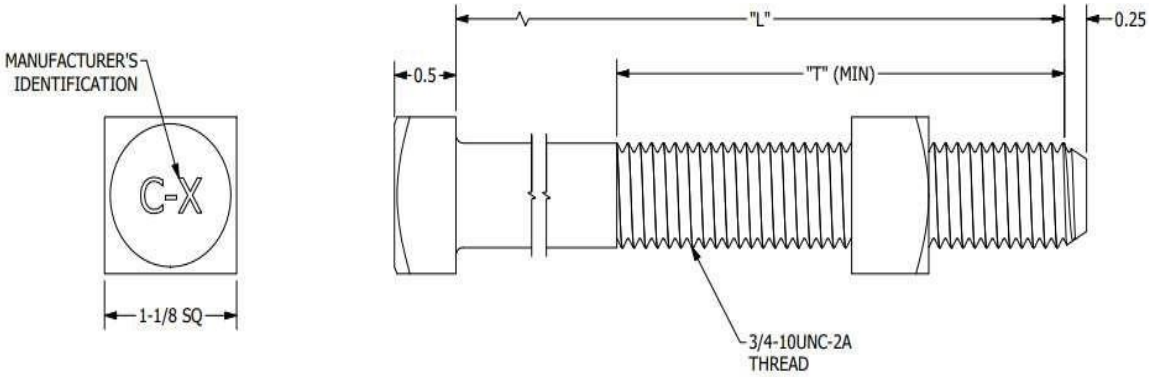

General

Coating Galvanized, ASTM A-153

Material Steel

Min. Tensile Strength 18350 lb

Item #	"L" Dimension (ins.)	"T"
LH017	20	6
LH018	24	6
LH019	28	6
LH032	22	6
LH033	12	6
LH034	16	6
LH035	18	6
LH036	26	6
LH037	14	6

4.9 Double Arming Eye Bolts 5/8”: LH015, LH022, LH024, LH025 and LH026

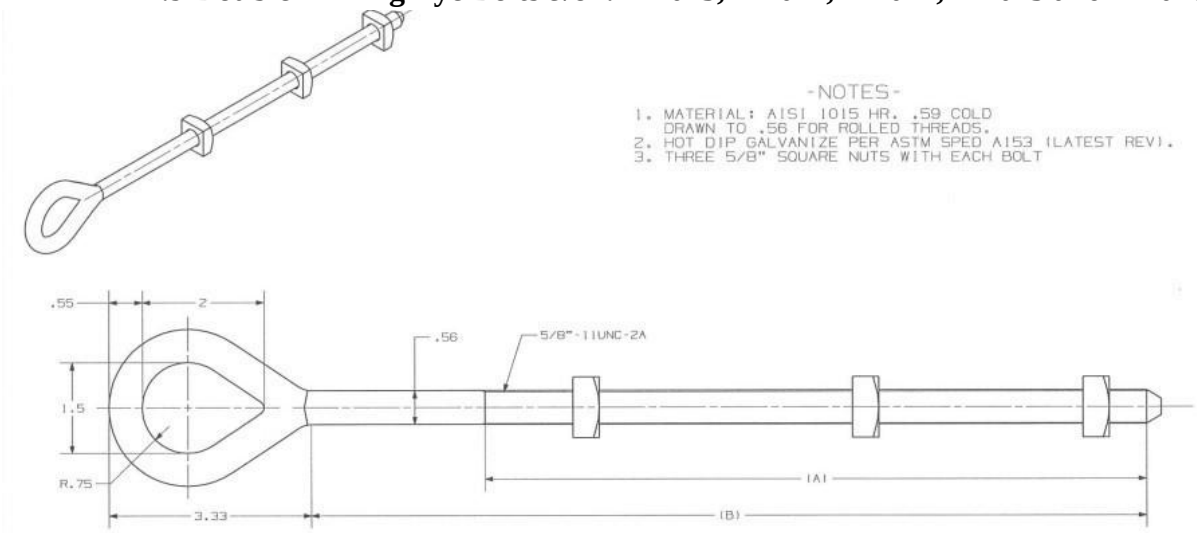

General

Coating Galvanized, ASTM A-153

Material Steel

Min. Tensile Strength 12400 lb

Three 5/8 inch square nuts must be supplied with each bolt.

Item #	Dimension (ins.)	
	“A”	“B”
LH022	17	20
LH015	15	18
LH024	19	22
LH025	11	14
LH026	13	16

4.10 LH040: BOLT, THIMBLE EYE ANGLE 3/4 X 12"

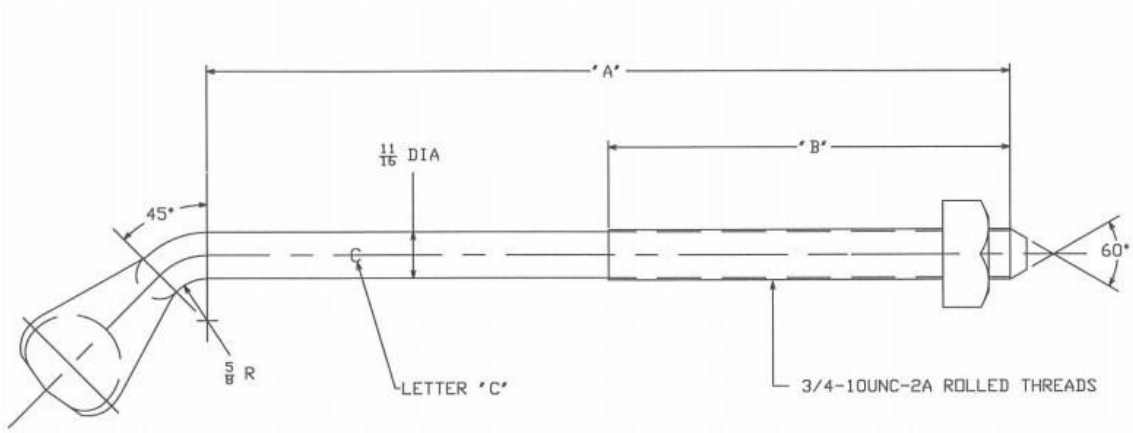

General

Coating

Galva

nized, ASTM A-153EU

RoHS Indicator No

Material Steel

Min. Tensile Strength 18350 lb

Item #	"A" Dimension "B"	
40	12	6

4.11 Thimble Eye Angle Bolt 5/8” LH041 and LH043

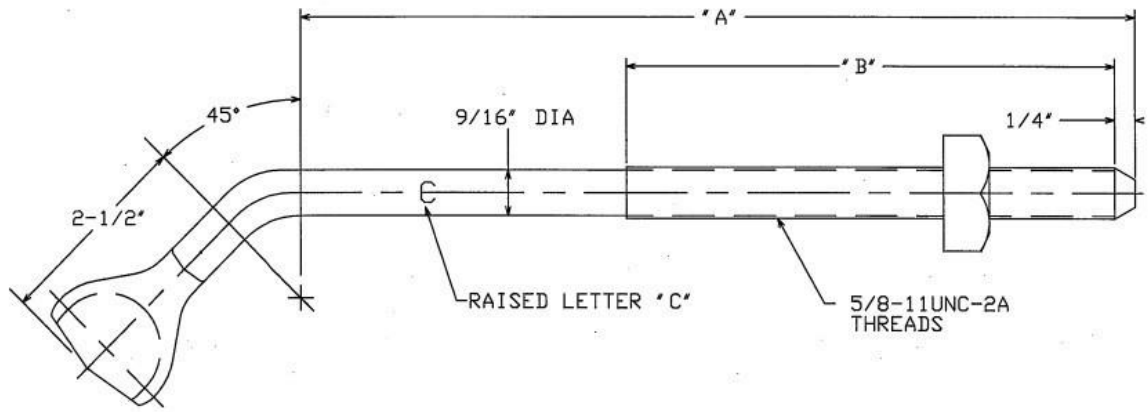

General

Coating Galvanized, ASTM A-153

Material Steel

Min. Tensile Strength 12400 lb

Items #	“A” Dimension (ins)	“B”
LH041	12	6
LH043	14	6

4.12 LH042: BOLT, THIMBLE EYE STRAIGHT 3/4 X 12"

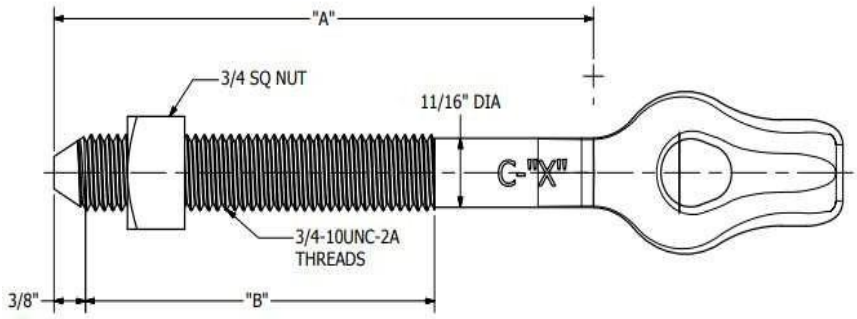

General

Coating Galvanized, ASTM A-153

Material Steel

Min. Tensile Strength 18350 lb

Item #	"A" Dimension (ins.) "B"	
42	12	6

4.13 : LH044: BRACE , FLATWOOD CROSSARM 32"

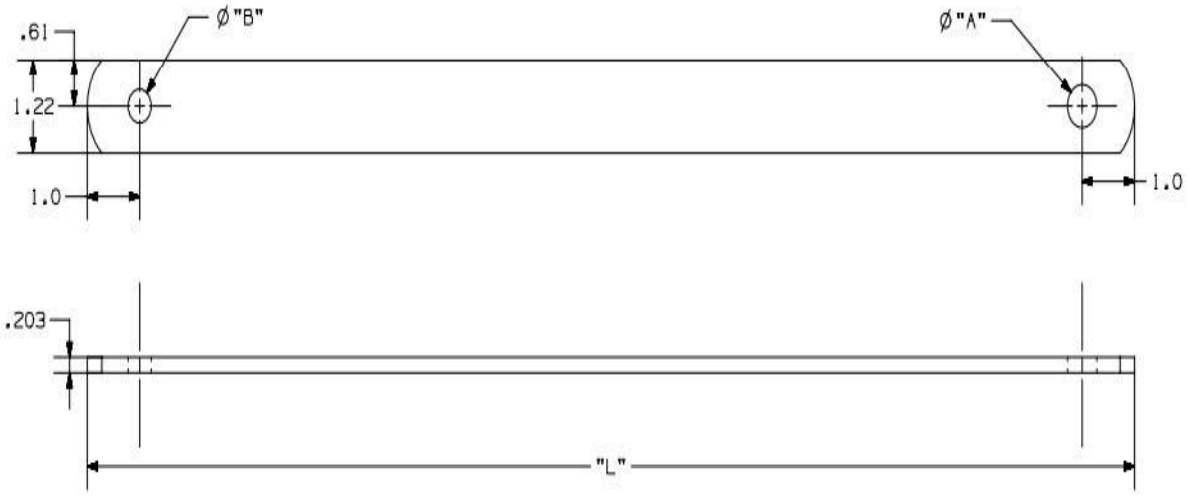

General

Coating	Galvanized, ASTM A-153
Material	Steel
Dimensions	“A”-9/16 Inches “L”-32 Inches

4.14 LH045: BRACE, CROSSARM 26"

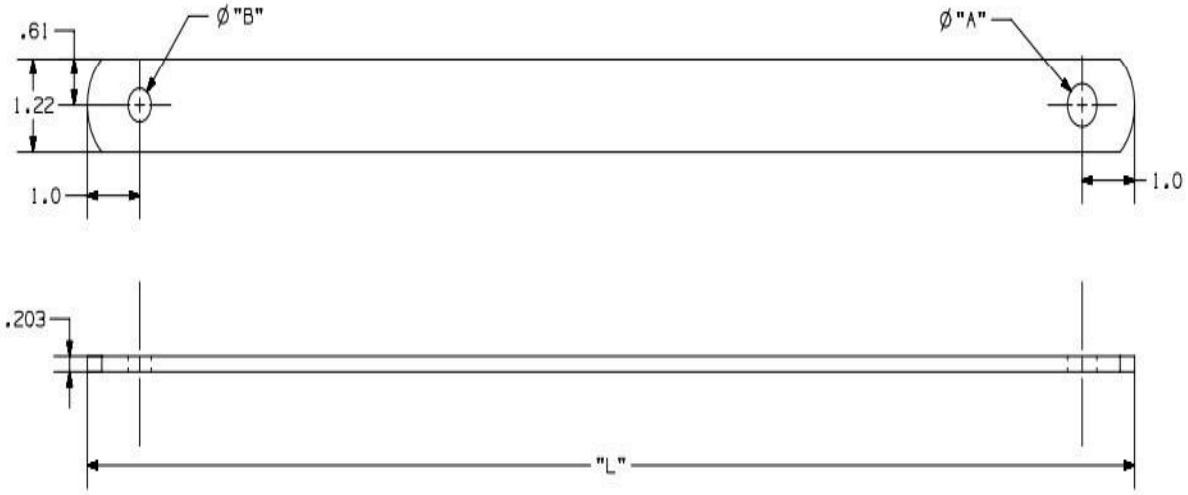

General

Coating	Galvanized, ASTM A-153
Material	Steel
Dimensions	“A”-9/16 Inches “B” 7/16 Inch “L”-32 Inches

4.15 LH046: RIDGE PIN

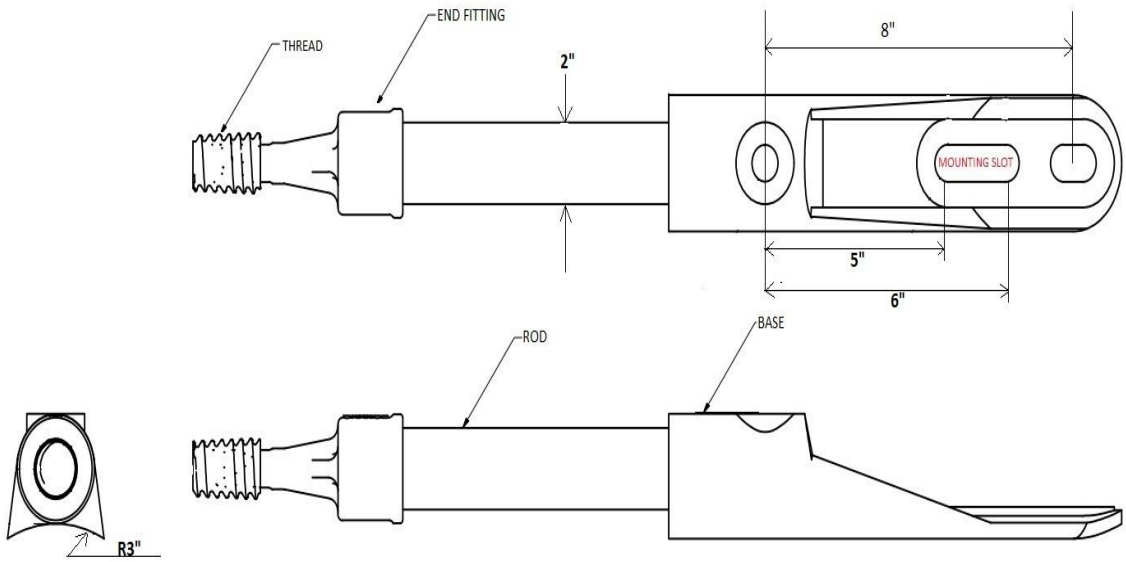

The bidder shall furnish a detailed dimensional

drawings of the Ridge PinsThe Ridge Pins shall have

the following technical particulars:

- The Base shall be of Ductile Iron confined to ASTM 65-45-12
- The Base shall be finished with Hot Dip Galvanize as per ASTM-A-153
- The Rod shall be of Fiber Glass with a diameter of 2 inch (50.8mm)
- The Rod shall be finished with Ultraviolet Protective Coating (Munsel Gray)
- The End Fitting shall be of Aluminum (A356-T6)

- The Tread Fittings shall be **1 inch Plastisol Coated Threads**
- The End Fittings and Rod shall total a minimum of **12 inch (305mm)**
- All mounting slots shall $\frac{11}{16}$" (17.5mm) in diameter.
- Minimum ultimate mechanical strengths are as follows:
    - Vertical – 2500 lbs. (1134kg)
    - Longitudinal – 2200 lbs. (998kg)
    - Transverse – 2200 lbs. (988kg)

4.16 LH048: CLAMP, STR, STRAIN DEAD END #2 ACSR # 1/7 STR

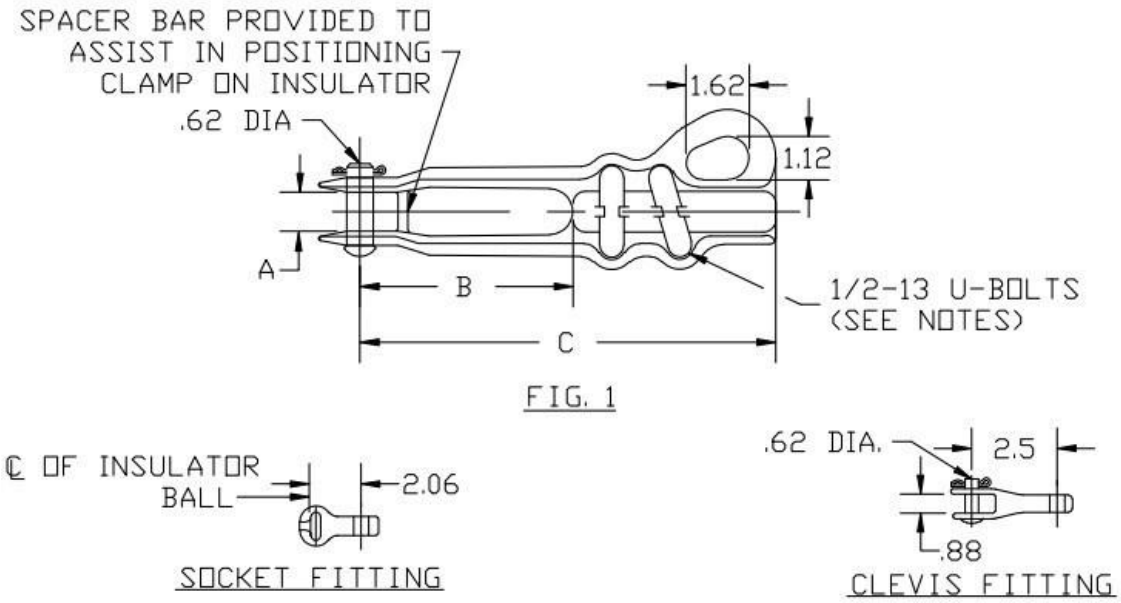

General

Fitting Type	None
Material	Aluminum
Material - Body	356 T6 Aluminum Alloy
Material - Hardware	Galvanized Steel
Material - Keeper	356 T6 Aluminum Alloy
Product Category	Straight LineMin. Strength Rating - Ultimate
Body	8000 lb Style ADS
Type	Bolted
U-Bolts	2 in

Dimensions

Diameter - Bolt 0.5 in

Diameter – Pin 0.625 in

Item #	Decimal Range		Conductor Size AWG or MCM				Dimension in Inches		
	Min	Max	Aluminum		ACSR		A	B	C
			Min.	Max.	Min.	Max			
48	0.31	0.88	#1 7 Str.	556.5 37 str.	#2 6/1	556.5 18/1	0.94	7.5	12

4.17 LH047: CLAMP, ANGLE SUSPENSION

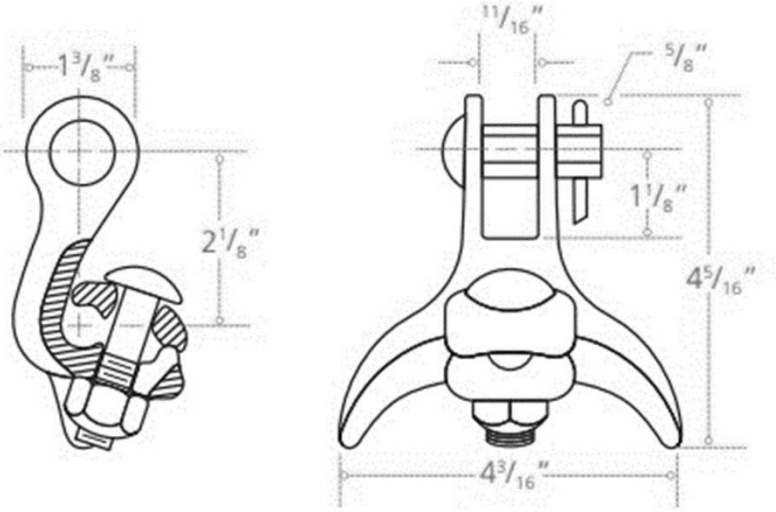

General

Bolt Installation Torque (Recommended)	480 in-lbs
Fitting Type	None
Material - Clamp Material - Hardware Material - Pin Material - Pin (Cotter) Material - Socket and Clevis	Ductile Iron Galvanized Steel Stainless Steel Stainless Steel
Product Category	Galvanized
Min. Strength Rating - Ultimate BodyType	Ductile Iron
	Suspension Clamp 7000 lb
	Ground Wire Suspension Clamps

Dimensions

Angle - Take-Off Maximum	60 °
Clevis Opening Diameter - Clevis	0.6875 in
PinHeight	0.625 in
Length	2

Electrical Ratings

Voltage Application
125

4.17 LH049: CLAMP, 3/0 -400 CU/AL 397.5

RUS Accepted

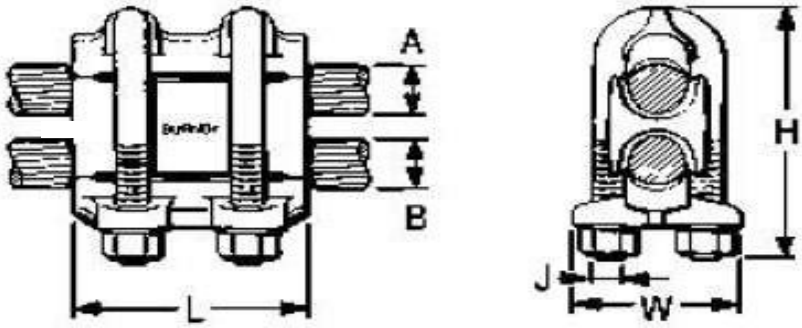

The above heavy duty aluminum connector is for transmission and distribution network.Groove A & B must be coated with Oxide-Inhibiting joint compounds.

Item #	Groove A		Groove B		Dimension (ins.)			
	ACSR	Copper or Aluminum	ACSR	Copper or Aluminum	H	J	L	W
49	110.8 (12-7) – 397.5 (18-1)	3/0 Str. - 400	110.8 (12-7) – 397.5 (18-1)	3/0 Str. - 400	4-5/8	½ - 1 3	4	2-5/8

4.18 LH050: CLAMP, 4/0-8 1-4/0 PG, LH064: CLAMP,BURNDY

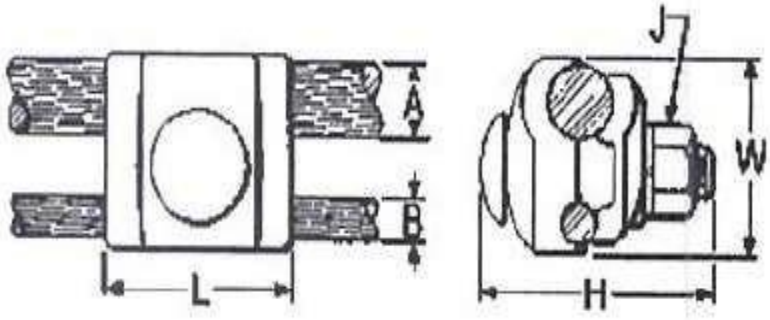

- Aluminum Parallel Groove Clamps one (1) bolt
- The set screw, lock washer and nut must be hot dip galvanized
- Use for Heavy Duty Service Entrance
- Parallel clamp groove must be filled with antioxidant compound

Item #	Tap (A)		Run (B)		Dimensions (ins.)				Wrench
	Copper & Aluminum	ACSR	Copper & Aluminum	ACSR	L	H	J	W	
LH050	1/0 Str. – 4/0 Str.	1/0 – 4/0	8 Sol. – 1/0 Str.	6 – 1/0	1-3/8”	2-3/8”	3/8”	1-7/8”	9/16
LH064	6 sol. – 1/0 Str.	8 Str. – 1/0 Str.	6 sol. – 2 Str.	8 - 2	1-1/8”	1-7/8”	5/16”	1-3/8”	

4.19 3 Bolt Clamps: LH051, LH053 and LH066

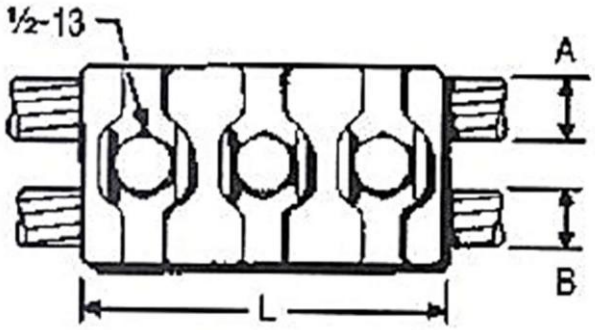

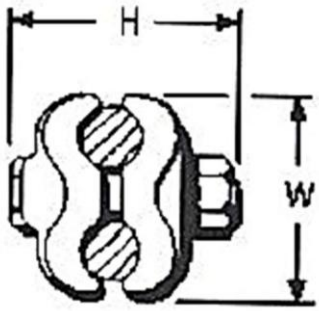

- Aluminum Parallel Groove Clamps three (3) bolts.
- The set screw, lock washer and nut must be hot dip galvanized
- Use for Heavy Duty Service Entrance
- Parallel clamp groove must be filled with antioxidant compound
- Must not be used for copper-to-copper application.

Item #	Tap (A)		Run (B)		Dimensions (ins.)			Wrench	Torque
	Copper & Aluminum	ACSR	Copper & Aluminum	ACSR	L	H	W		
LH051	450 477 500	397.5	450 477 500	397.5	5”	3”	2.50	3/4	480
LH053	250 266.8	4/0	250 266.8	4/0	4”	2-7/8”	2.13		
LH066	336.4 350	336.4 (18-1)	336.4 350	336.4 (18-1)	4-1/2”	2-7/8”	2.38		

4.20 Stirrup Clamps: LH052 and LH061

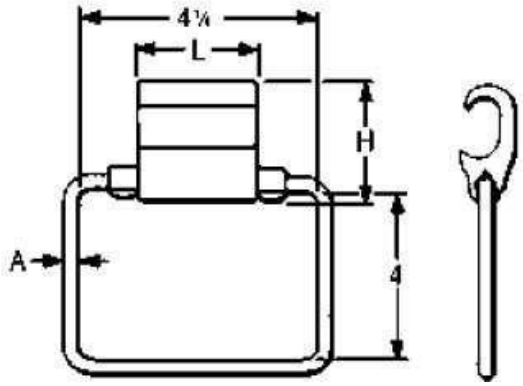

- To be used for AAC (Stranded, Compressed, Compact), ACSR, AAAC
- Material: Aluminum
- Tension Rating: ANSI C119.4 Class 3 (Non-Tension)
- A combination of 6-shaped aluminum tap connector with tin-plated copper bail. Can be gripped in tool and slipped over line for easy installation. Five sizes accept a range from #4 to 600 kcmil. Prefilled withOxide-Inhibiting joint compound and strip sealed to limit oxide growth and to increase the life of the connection.

Item #	Aluminum	ACSR, 6201, 5005	A	H	L	Die Index
LH052	300 (37) – 400 (37)	266.8 (6-7) – 336.4 (30-7)	2 Sol.	2-1/4	2-1/8	R
LH061	397.5(19) – 600 (61)	336.4 (26-7) – 556.5 (18-1)	1/0			N

4.21 2 Bolt Parallel Groove Clamp: LH054 and LH065

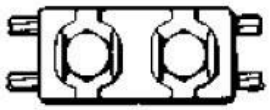

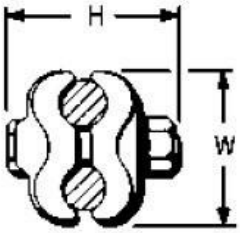

- Aluminum Parallel Groove Clamps three (2) bolts.
- The set screw, lock washer and nut must be hot dip galvanized
- Use for Heavy Duty Service Entrance
- Parallel clamp groove must be filled with antioxidant compound
- Must not be used for copper-to-copper application.

Item #	Tap (A)		Run (B)		Dimensions (ins.)			Wrench	Torque
	Copper & Aluminum	ACSR	Copper & Aluminum	ACSR	L	H	W		
LH054	3/0 sol – 2/0 str.	1/0	3/0 sol – 2/0 str.	1/0	4”	2-7/8”	2.13	3/4	480
LH065	4/0 Str.	3/0 134.6 (12-7)	4/0 Str.	3/0 134.6 (12-7)					

4.22 LH055: CLAMP, SUSP HAS - 40/86

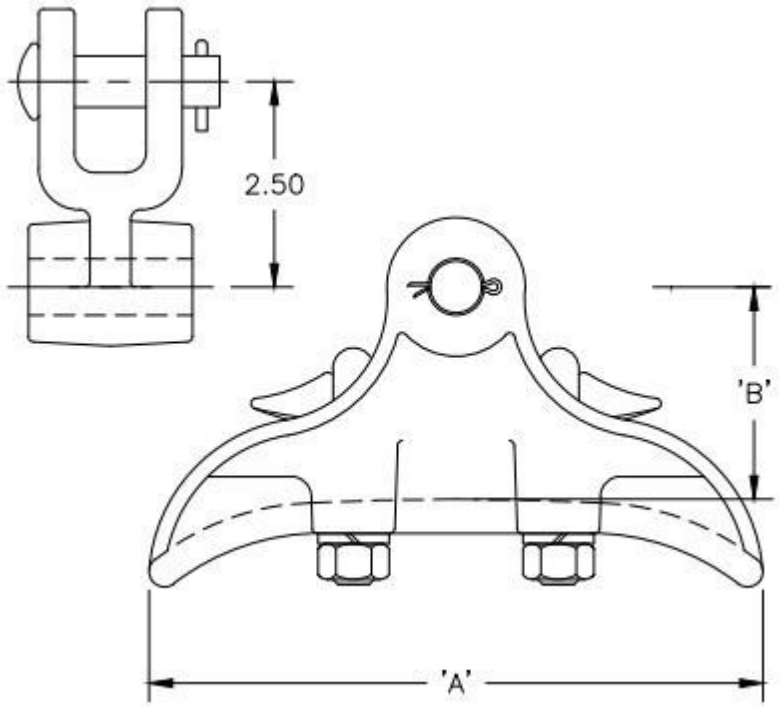

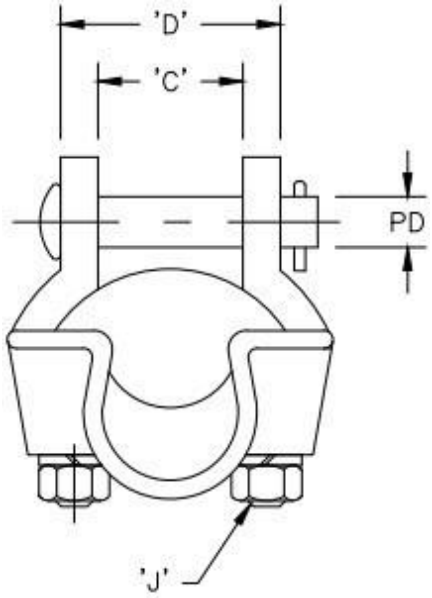

General

Bolt Installation Torque (Recommended)	480 in-lbsFitting TypeClevis
Material - Clamp	Aluminum
Material - Hardware	Galvanized Steel
Material - Pin	Stainless Steel
Material - Pin (Cotter)	Stainless Steel
Material - Socket and Clevis	Galvanized Ductile Iron
Product Category	Suspension Clamp
Strength Rating - Ultimate Body	18000 lb
Type	Standard Voltage Suspension Clamps
U-Bolts	1/2 in

Dimensions

Angle - Take-Off Maximum	30 °
Clamping - Maximum	0.85 in
Clamping - Minimum	0.4 in
Clevis Opening	0.9375 in
Diameter - Clevis Pin “PD”	0.625 in
Height “B”	2.5625 in
Length “A”	7.5 in
“C”	1.12 in
“D”	1.84 in

4.23 LH056: CLAMP, 397-3/0-500

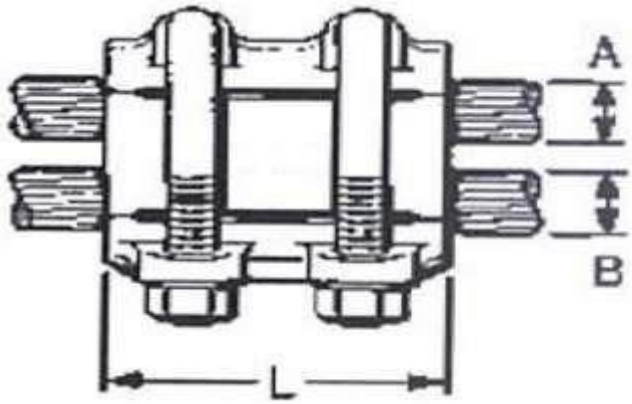

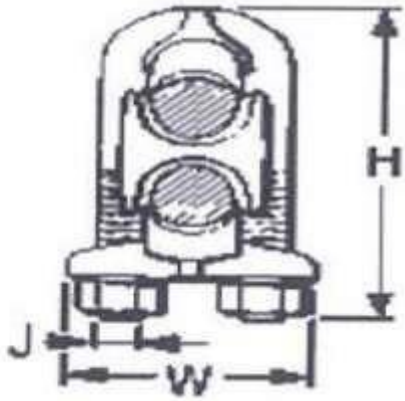

- Aluminum Parallel Groove Clamps for the used of connection of conductors used in Primarydistribution (13.8kv) and transmission (69kV).
- The set screw, lock washer and nut must be hot dip galvanized
- Parallel clamp groove must be filled with antioxidant compound, equip with a spacer to confine cablestrands to prevent splaying.

Item #	Tap (A)		Run (B)		Dimensions (ins.)			
	Copper & Aluminum	ACSR	Copper & Aluminum	ACSR	L	H	W	L
56	397.5 - 954	336.4 - 795	397.5 - 954	336.4 - 795	4-1/2”	6-1/4”	3-1/4	4-1/2”

4.23 LH057: CLAMP, DEAD END 3/0 - 350

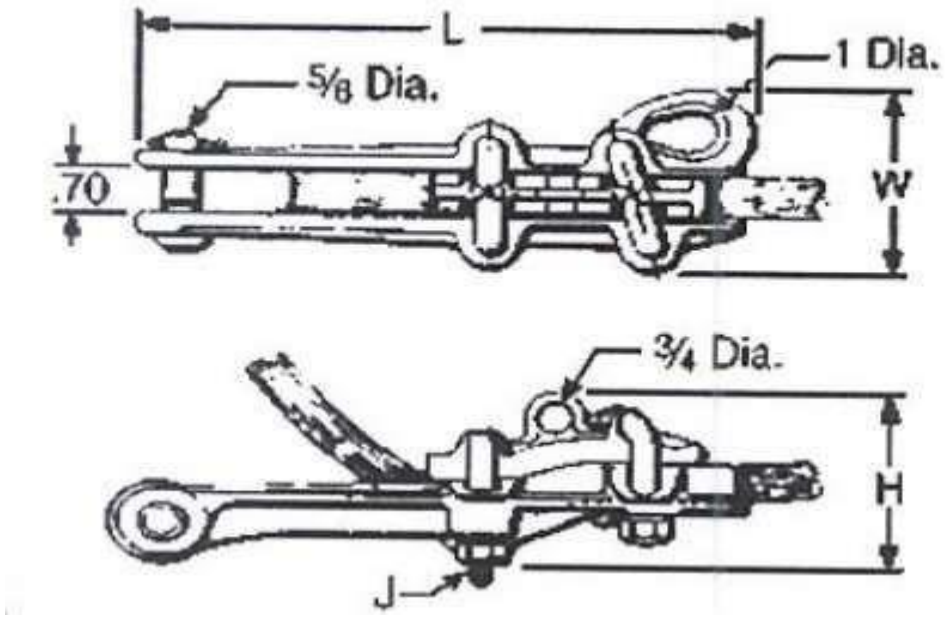

- Dead end Clamp
- Aluminum clamp is to be used on primary distribution lines
- Equip with
    - Hot stick lifting-eye.
    - Pulling eye
    - Angled U-bolts
- Galvanize steel

Item #	Aluminum	ACSR	Dimensions (ins.)			
			J	W	H	L
57	3/0 - 350	3/0 – 333.4	½ - 13	3-5/8	4	10

4.24 LH059: CLAMP, HOT LINE 8 SOL - 2/0 STR, LH063: CLAMP, HOT LINE: 8 SOL - 2/0 STR,LH067: CLAMP, HOT LINE #4 / #6

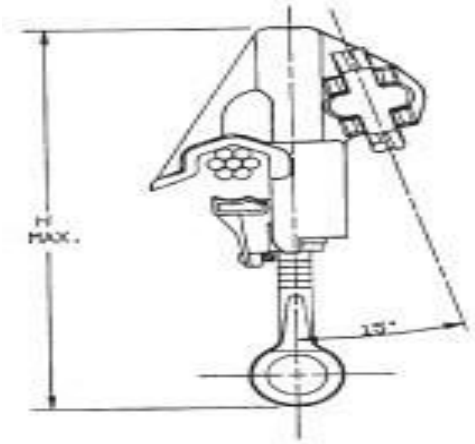

- For Aluminum and ACSR conductor.
- Designed for standard “hot stick” application.
- Material: Body and Keeper – Aluminum Alloy
- Eyebolt – Bronze Alloy – Tin Plated
- Eye stem – Bronze Alloy, Forged or Stainless Steel
- Spring (on eye stem) – Stainless Steel

Item #	Main Line	Tap	Plating	Conductor Range (AWG or kcmil)				Dimension Inches (mm)		Tap Nut
				Main		Tap				
				ACC	ACSR	AAC/CU	ACSR	L	H	
LH 059	AL	AL	None	#8 – 2/0 str.	#8 – 1/0	#8 – 2/0 str.	#8 – 1/0	1.0 (25.4)	5.25 (133)	9/16
LH 063	AL	AL/CU	Tin plated	0.162 – 0.745 (4.12 – 18.96)		0.162 – 0.547 (4.12 – 13.92)		1.75 (44)	7.31 (186)	¾ (19)
LH 067				0.502 – 1.031 (12.78 – 26.24)		0.198 – 0.703 (5.03 – 17.89)		1.81 (46)		

4.25 LH060: CLAMP, HOTLINE STIRRUP (BAIL) 336.4MCM

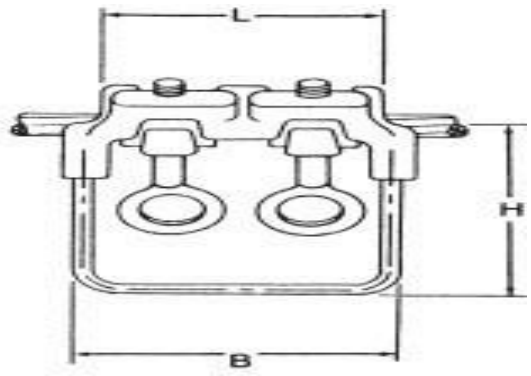

Product Data & Conductor Size									
Item #	Conductor Range (AWG or MCM)		Copper Loop Size (inches)	Bolt		Dimension Inches (mm)			Approx. Wt.
	AAC	ACSR		No.	Size	L	B	H	
60	1/0 - 500 MCM	1/0 – 397.5 MCM	2/0 (0.365)	2	7/16 (11.18)	3-11/16 (93.66)	4 (101.6)	4-3/32 (103.99)	1.65

- For aluminum or ACSR conductor.
- Eyestem must be 30º ±2º angle from the stirrup.
- Material: Body – Aluminum Alloy
- Eyestem – Bronze Alloy—Tin Plated or Stainless Steel
- Stirrup – Copper-un-plated

4.26 LH062: CLAMP, STRAIN GUY 4" x 1 9/16"

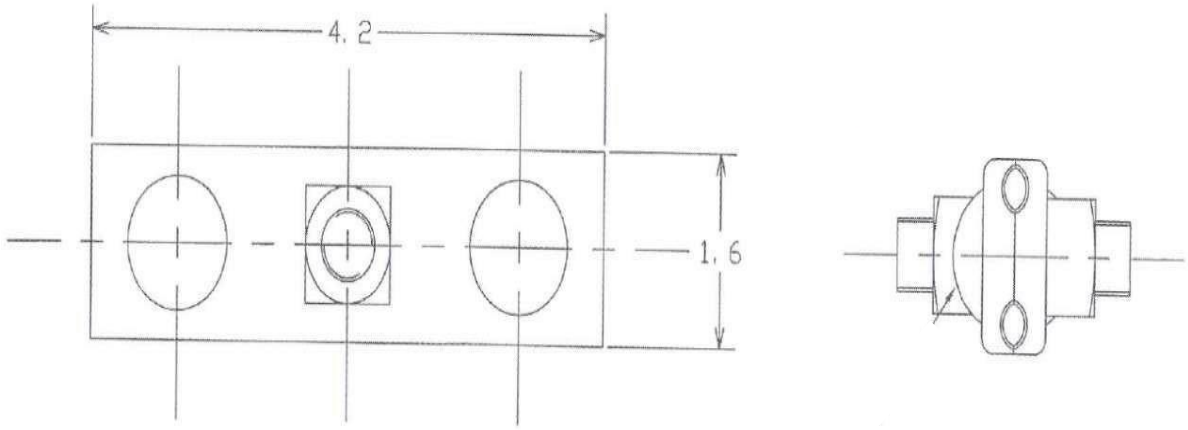

General

Material:	Steel, Hot Dip Galvanize as per ASTM A153
Bolt:	Equipped with ½ x 1-5/8 Carriage Bolt and Square Nut

4.27 LH068: CLEVIS, BALL END 52-5

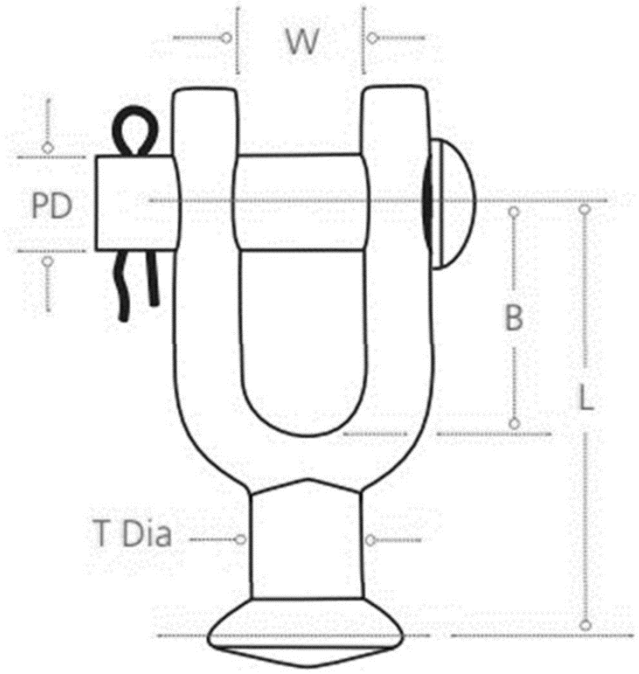

General

Material Steel

Material - Pin (Clevis) Galvanized Steel

Material - Pin (Cotter) Stainless SteelMin.Strength Rating - Ultimate 30000 lb Strength Rating - Ultimate

Body 0 lb **Dimensions**

“L’’	3.938 in. (100mm)
“B”	2.5 in. (63.5mm)
“W”	0.8125 in. (20.3mm)
“PD”	0.625 in. (15.9mm)
“T Diameter”	0.719 in. (18.3mm)

4.28 LH069: CLEVIS INSULATED

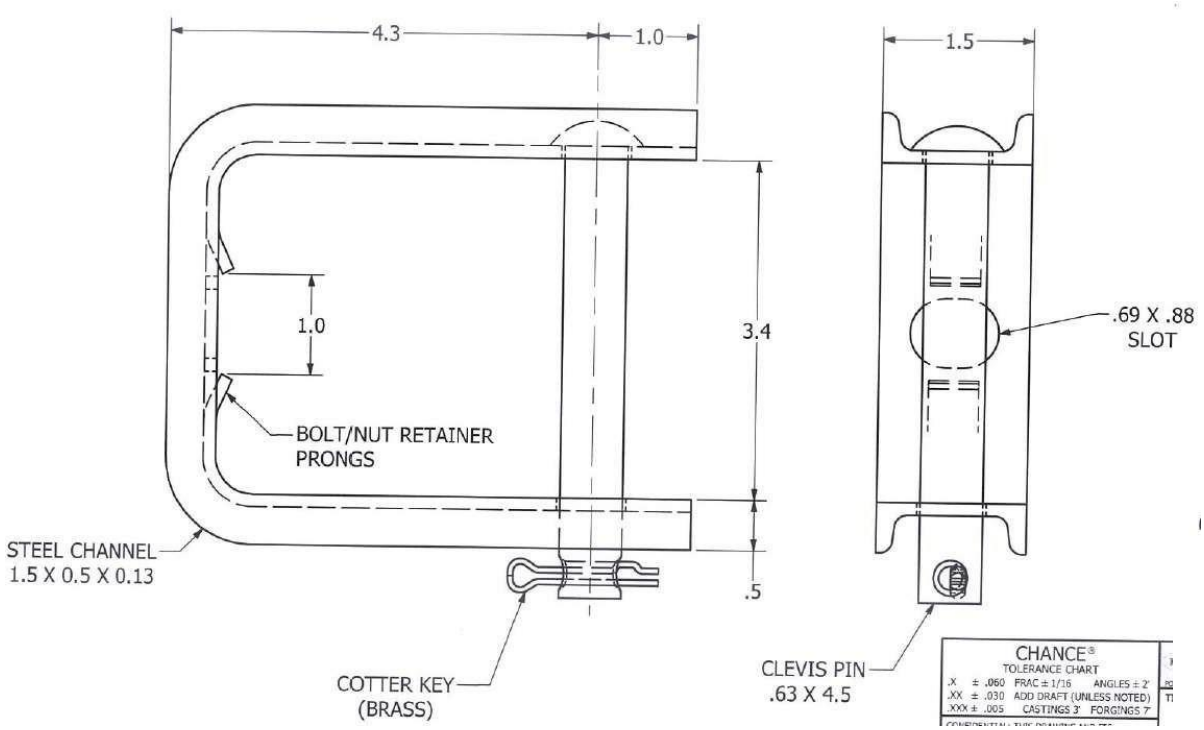

General

Coating	Galvanized, ASTM A-153
Material	Steel

Dimensions

Height	3.25 in
Length	4.25 in

4.29 LH070: CLEVIS SINGLE SPOOL

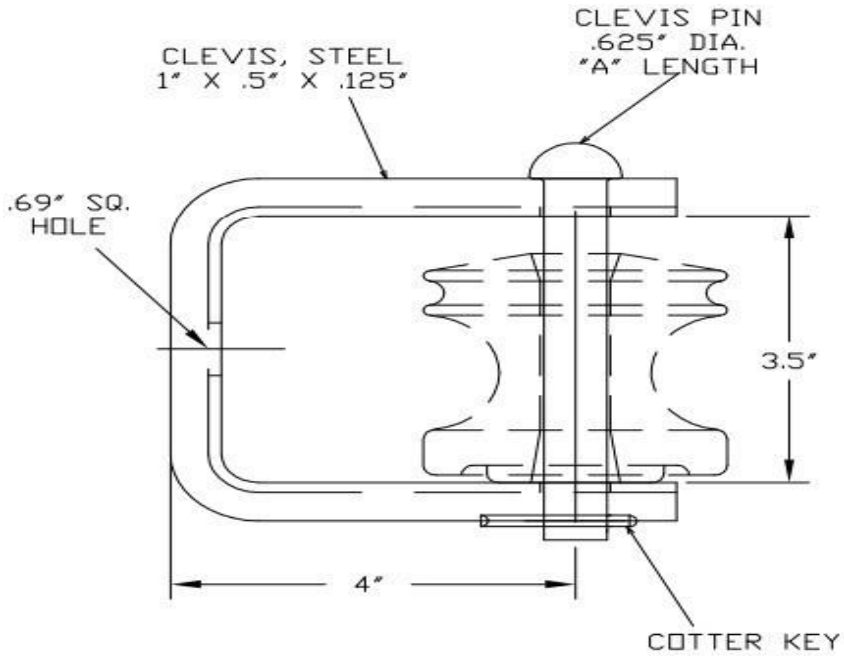

General

Coating

Galva

nized, ASTM A-153

Material Steel

Dimensions

Height 3.50 in

Length 4.00 in

"A" 4.75 in

4.30 LH071: CLEVIS SOCKET

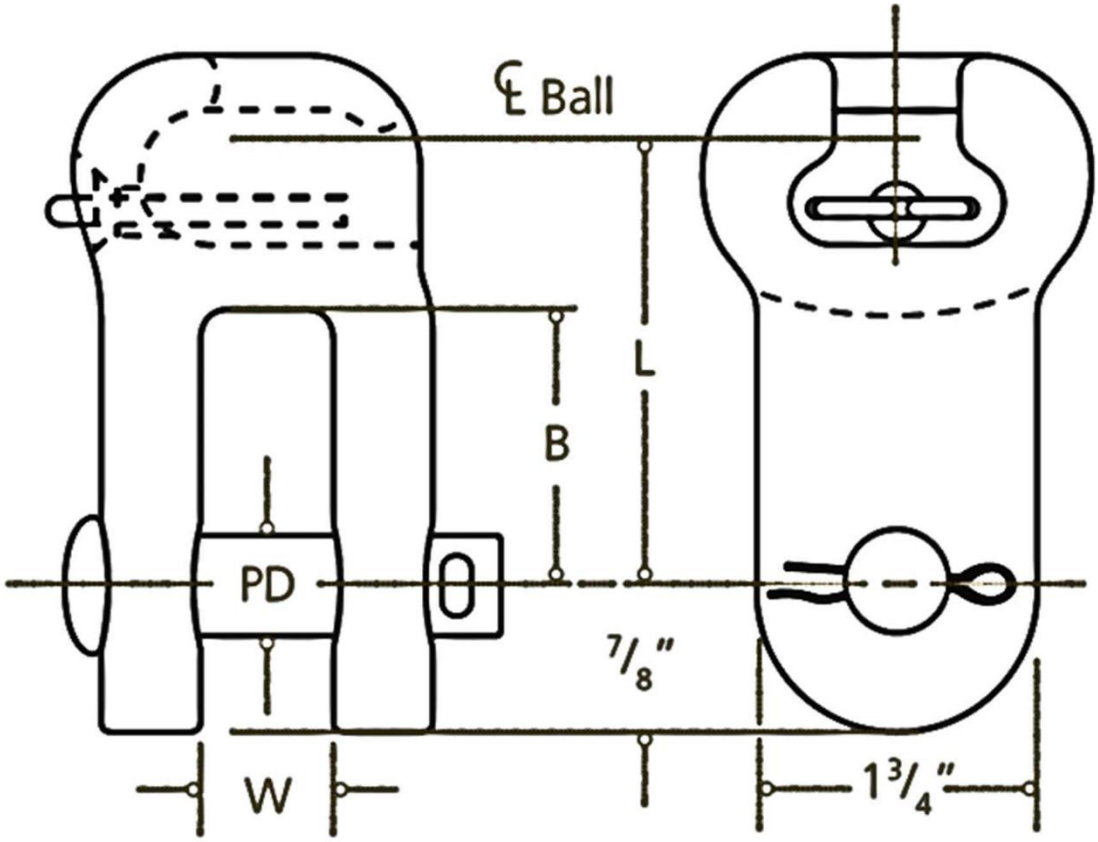

General

Material	Ductile Iron		
Material - Pin (Clevis)	Galvanized Steel	Material - Pin (Cotter)	Stainless Steel Min.
Strength	30000 lb		

Dimension

“W”:	13/16 ins. (20.6mm)
“B”:	1-5/8 ins. (41.3mm)
“L”:	2-5/8 ins. (66.7mm)
“PD”:	5/8 ins. (15.9mm)

4.31 LH072: CLIP WIRE ROPE 5/8

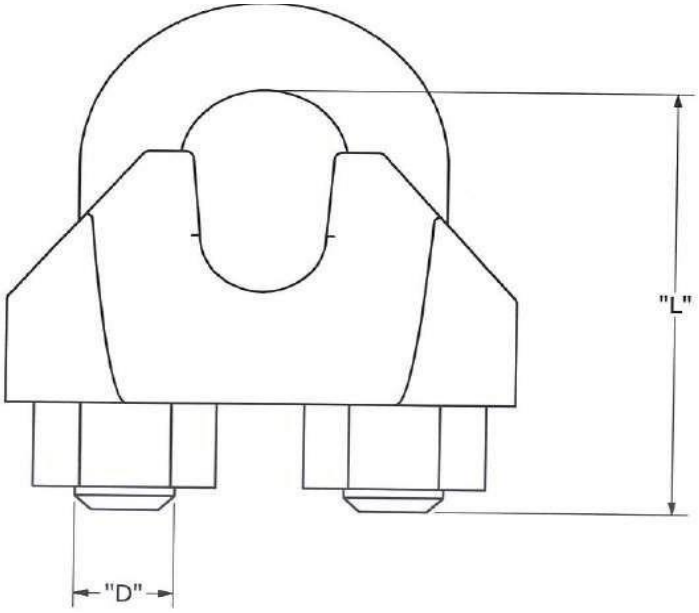

General

Coating	Galvanized, ASTM A-153
Material	Steel

Dimension

Tread thicknes s “D”: ½ - 13.	
“L”:	2.13
Clamp Size	5/8 ins.

4.32 LH073: DEAD END ASSEMBLY

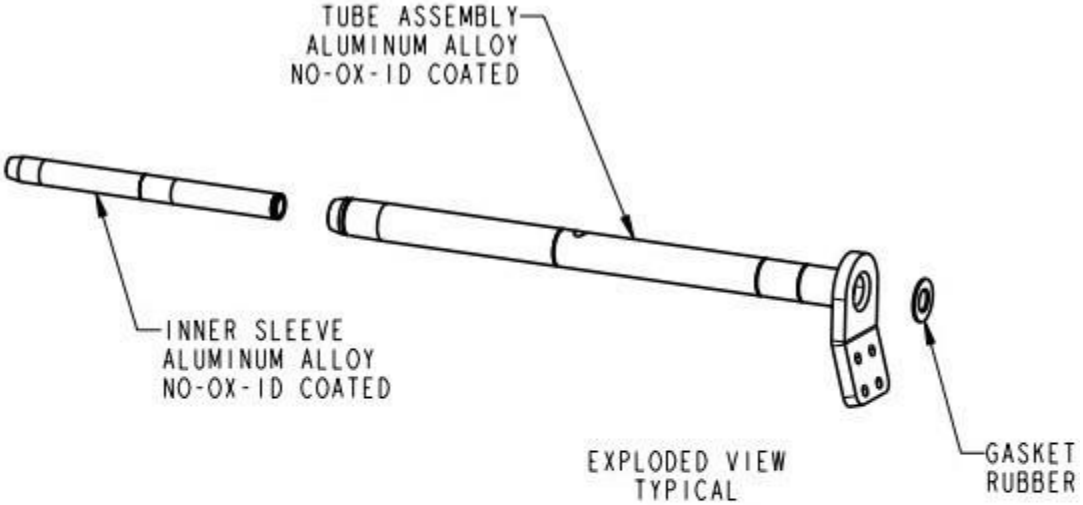

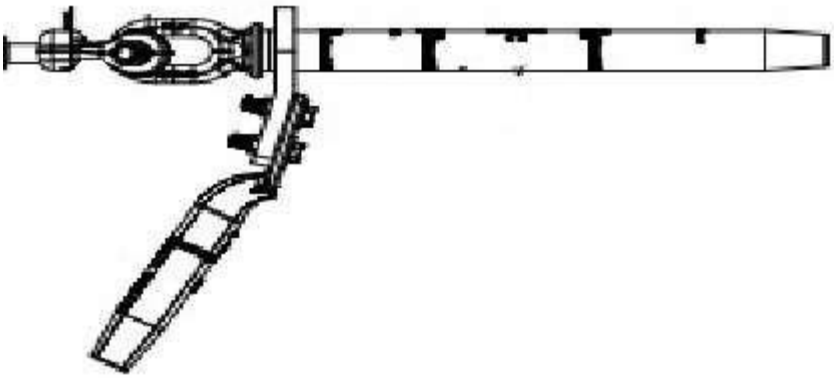

General

Connector Type Dead-end Must be dip galvanized per ASTM A153

Sleeve should accommodate ACSR Partridge and AAAC Canton.

4.32 LH074: CLEVIS, DEADEND THIMBLE

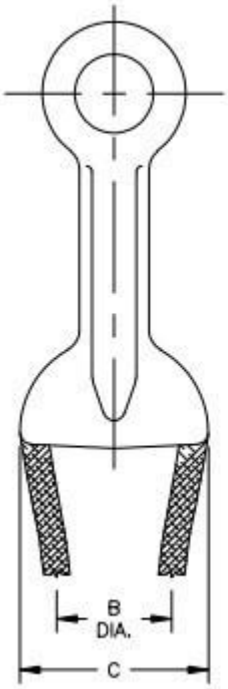

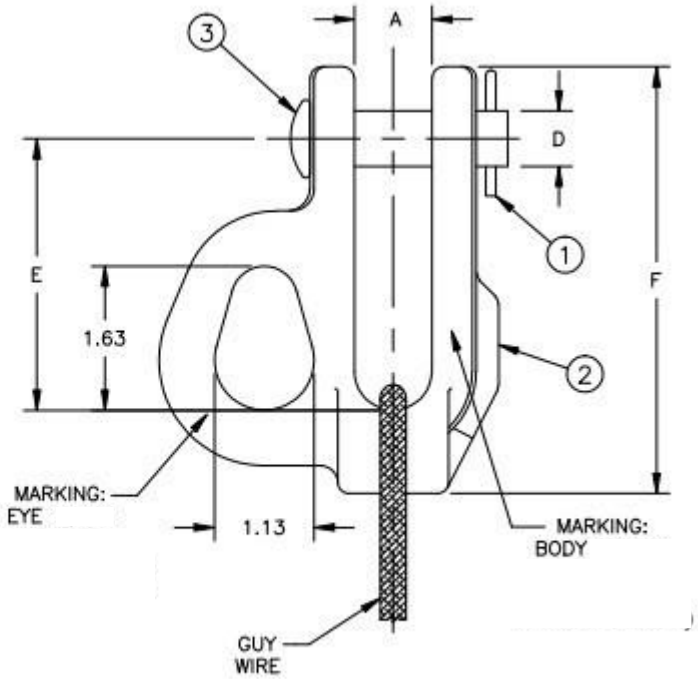

General

Material	Aluminum	
Product Category	Thimble Type	
Min. Strength Rating -		
Eye	6000 lb Min. Strength Rating - Thimble	10000 lb
Type	Bolted	
Body	High Strength Aluminum Alloy	
Clevis Pin	Galvanize Steel	
Cotter Pin	Stainless Steel	

Materials:

Label-1:	Cotter Pin
Label-2:	Body is aluminum dead-end thimble

Label-3: Clevis Pin

4.33 LH075: ROD, EARTH BOLT EYE 5/8 X 8' DR. HD

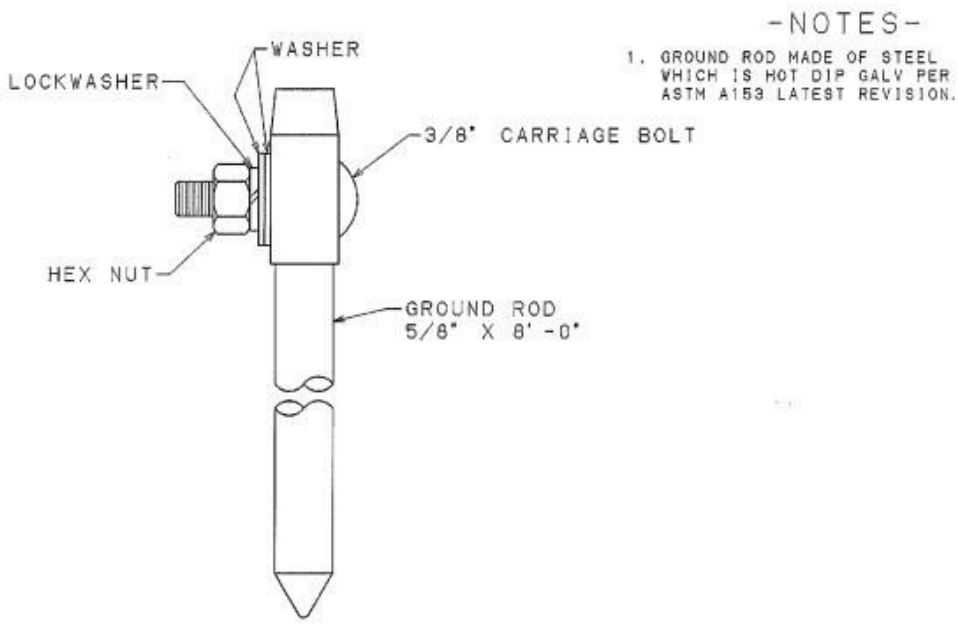

General

Coating	Galvanized, ASTM A-153
Material	Steel

Dimensions

Diameter	0.63 in
Length	96.00 in
Weight	8.75 lb

4.34 LH076: EYE, THIMBLE ANGLE FOR 5/8"

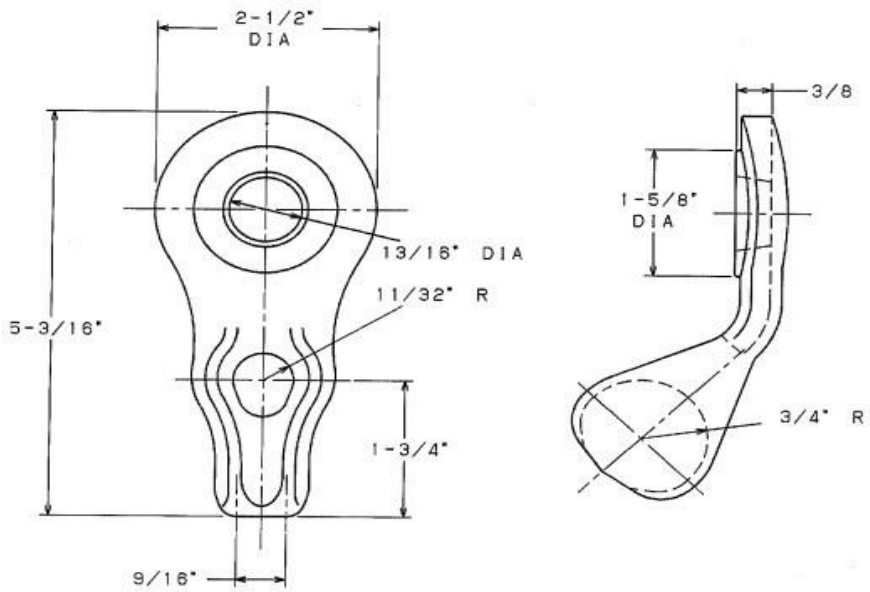

General

Coating

Galva

nized, ASTM A-153

Material Steel

4.35 LH077: EYENUT, THIMBLE 5/8"

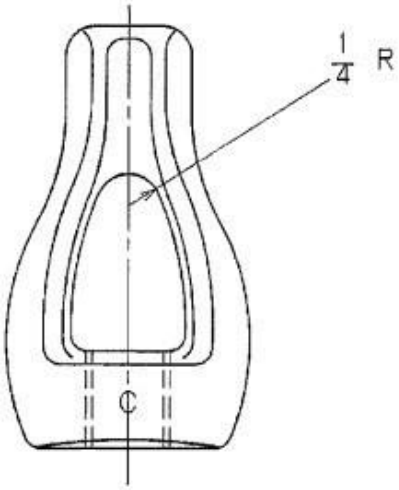

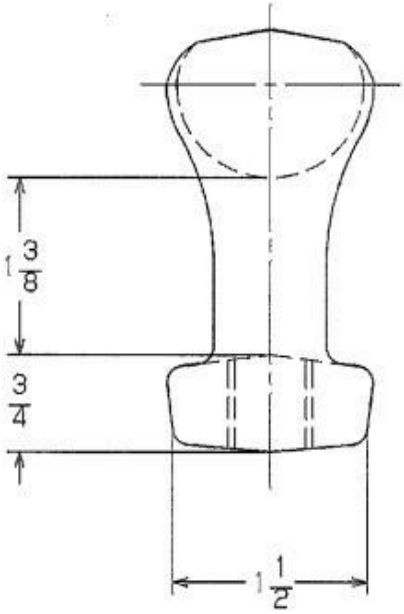

General

Coating	Galvanized, ASTM A-153
Material	Steel
Min. Tensile Strength	13550 lb

Application

Use for attaching to 5/8" thru-bolts or threaded end of straight or angle thimbleye bolts for straight-away headguys.

4.36 LH078: EYENUT, GALV. MILD STEEL OVALEYE

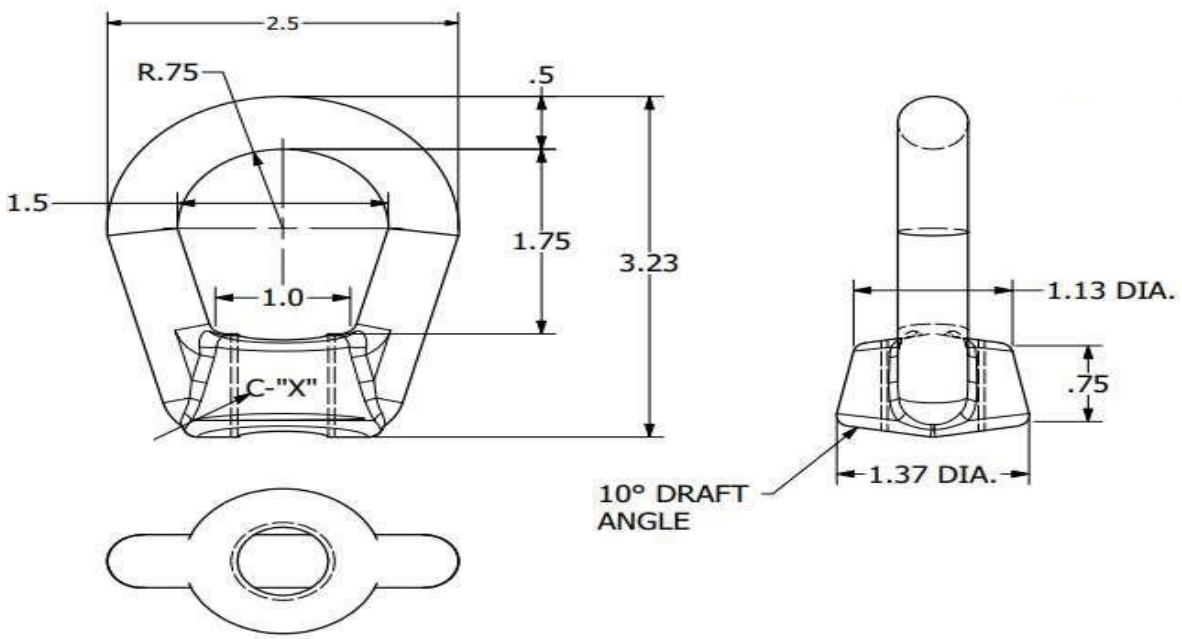

General

Coating	Galvanized, ASTM A-153
Material	Steel

4.37 LH079: FUSEHOLDER, 300 AMP

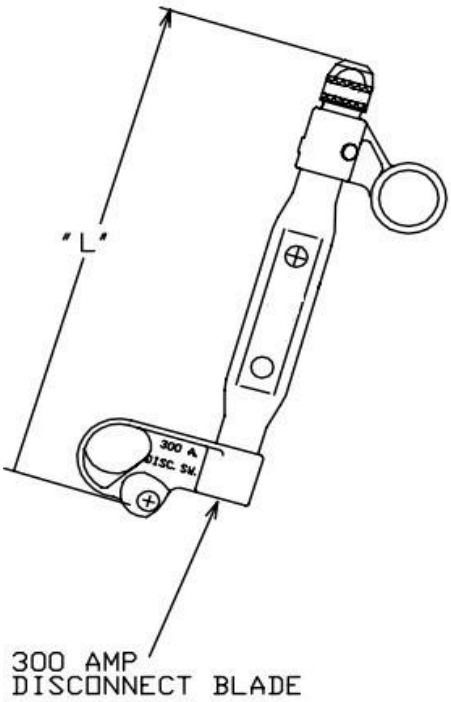

General

The item above is equipped with a 300A Disconnect Blade.

Dimension

"L" – 11.59 in. (294mm)

Note:

Item #79 is similar to Hubbell Catalog #T710133T

4.38 Fuse Holders 200 Amps (LH081) and 100 Amps (LH080)

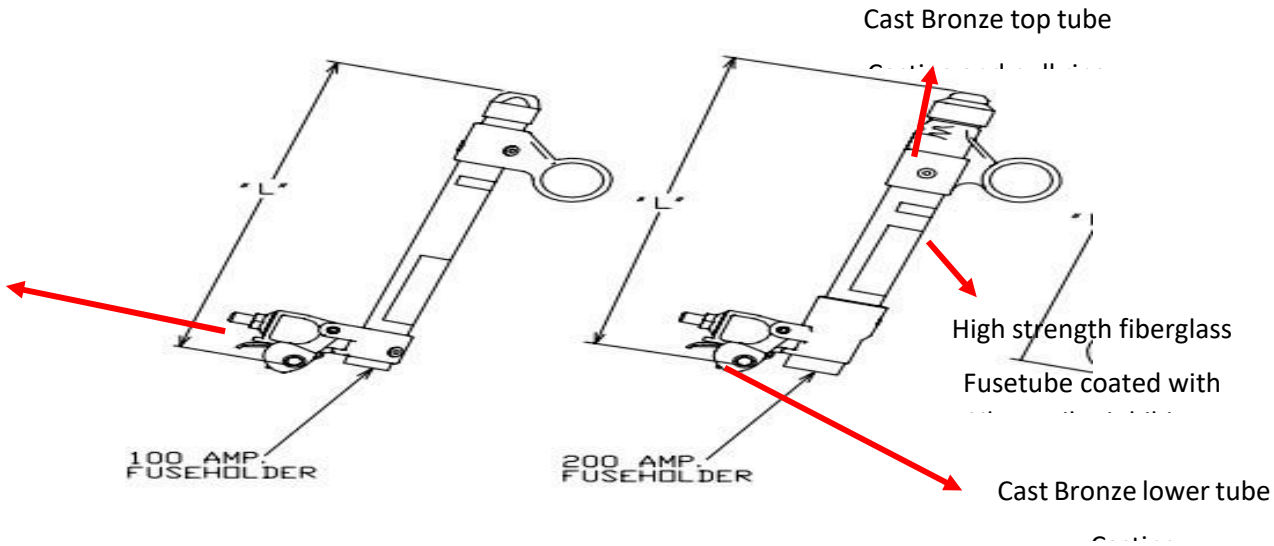

Large Nut or SS Nut With clamp to fasten Fus

e
l
i
n
k
s

Dimension

"L" – 11.59 in. (294mm)

Note:

LH080 is similar to Hubbell Catalog #T710114TLH081 is similar to Hubbell Catalog #T710143T

4.39 Preformed Dead-End Aluminium Grips: LH082, LH083, LH084, LH086, LH087, LH088, LH100and LH101

General:

Finish: Hot Dipped Galvanized

Material: Galvanized Steel

Item #	Diameter Range (inches)		ACSR	Nominal conductor Sizes			Length (Inches)
	Min	Max		All-Alum	Alum. Alloy	Comp ACSR	
LH082	0.740	0.837	397.5, 18/1 477, 36/1 477, 18/1	450, 19W 477, 19W 500, 37W	397.5, 19W	477, 18/1 556, 19W	50
LH083	0.517	0.577	4/0, 6/1	4/0, 7W	4/0, 6/1	4/0, 6/1	34
LH084	0.290	0.325	#2, 6/1 #2, 7/1	#2, 7W	#2, 7W	#2, 6/1	24
LH086	0.654	0.739	336.4, 18/1	336.4, 19W	336.4, 19W	397.5, 18/1	39
LH087	0.290	0.325	#2, 6/1 #2, 7/1	#2, 7W	#2, 7W	#2, 6/1	24
LH088	0.517	0.577	4/0, 6/1	4/0, 7W	4/0, 6/1	4/0, 6/1	34
LH100	0.410	0.460	2/0, 6/1	2/0, 7W	2/0, 7W	2/0, 6/1	28
LH101	0.365	0.409	1/0, 6/1	1/0, 7W	1/0, 7W	1/0, 6/1	26

4.40 Lugs: LH090, LH091, LH092, LH093, LH096 and LH089

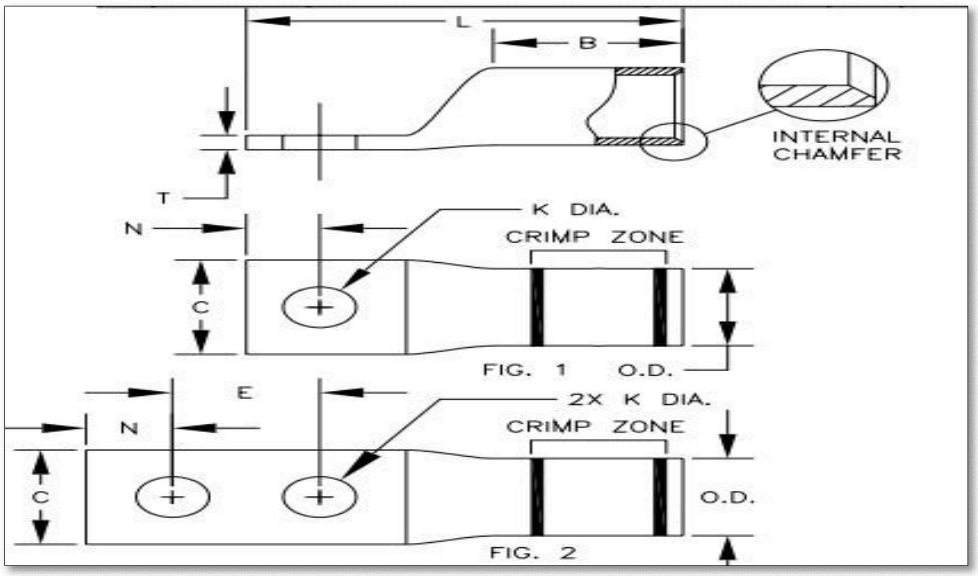

Item #	AL/Cu Conductor	Dimension (ins.)										Die Index	Wire Strip Length	Temp. Rating
		Stud Size	(K)	No. of Holes in Pad	(OD)	(B)	(C)	(L)	(N)	(E)	(T)			
LH090	1/0 AWG	½	0.56	1	0.60	1.05	1.03	2.83	0.63	-	0.17	296	1-1/16	90ºC
LH091	500 kcmil 350 kcmil	5/8	0.69		1.32	2.34	1.80	5.56	0.88	-	0.46	300	2-5/8	
LH092	1/0 AWG	½	0.56	2	1.11	1.85	1.52	6.07	0.63	1.75	0.39	299	2-1/8	
LH093	4/0 str.				0.85	1.39	1.17	5.19			0.30	298	1-5/8	
LH096	350 kcmil 250 kcmil				1.11	1.85	1.52	6.07	0.63		0.39	299	2-1/8	
LH089	4/0 str.			1	0.85	1.39	1.17	5.19	0.63	-	0.30	298	1-5/8	

- Must be used on both aluminum and copper conductors.
- Connectors must be clearly marked with wire size, die index, color code, and crimp location bands
- Must pre-filled with oxide inhibitor
- Must have color coded end caps are factory inserted in the

  barrels to match the diecolor code and prevent foreign

  materials from entering the barrel.

- Must accommodate conductor types:
  - Aluminum Code Wire: Class B (Concentric, Compressed, Compact)
  - Copper Code Wire: Class B (Concentric, Compressed,

Compact or Class CCopper Clad Aluminum: Noted in the conductor accommodates as CCA

4.41 LH094: LUG, ALUM. COMPR. 266.8 MCM NO

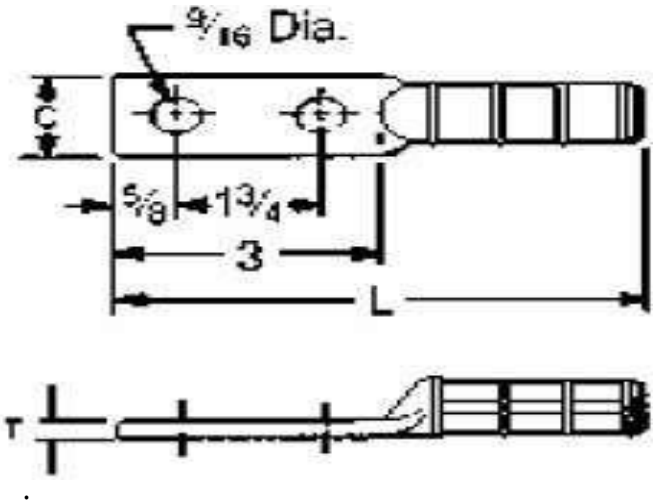

Item #	Conductor	C	L	T	Die Index
94	300 (19, 37)	1-1/2	5-1/2	3/8	170

- Material, made of pure cable.
- Copper compression for terminating copper conductors to switch pads and other substation or switchyard apparatus.
- Must compile to NEMA standard mounting holes. Installed with same dies as equivalent full-tensionsleeves.

4.42 LH095: LUG, ALUM. 2 HOLE
COSMOS 477 MCM /500 MCM

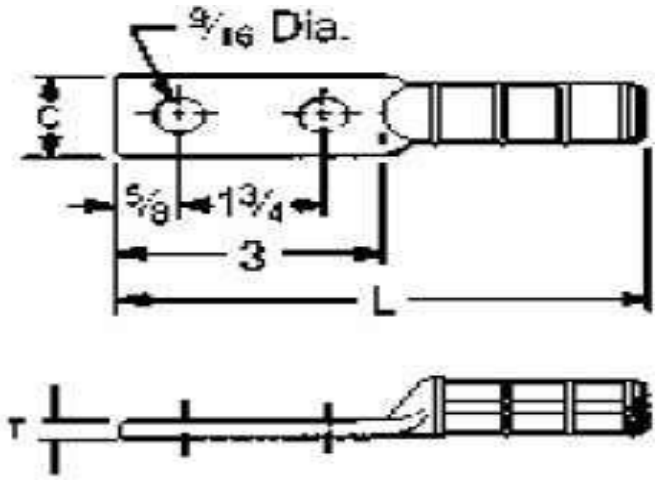

Item #	Conductor		C	L	T	Die Index
	ACSR, 6201,5005	Aluminum				
95	397.5 (26-7, 30-7)	477 (19, 37) – 500 (37,61)	1-7/8	7-1/2	3/8	317

Material: Aluminum

Aluminum compression for terminating jumper loops and equipment taps at switch pads and other substationapparatus.

Must compile to NEMA standard mounting holes. Installed with same dies as equivalent full-tension sleeves.

Must be prefilled with Oxide-Inhibiting joint compound, strip sealed, and capped to limit oxide growth andincrease the life of the connection.

4.42 LH098: PIN, CROSS ARM 1"

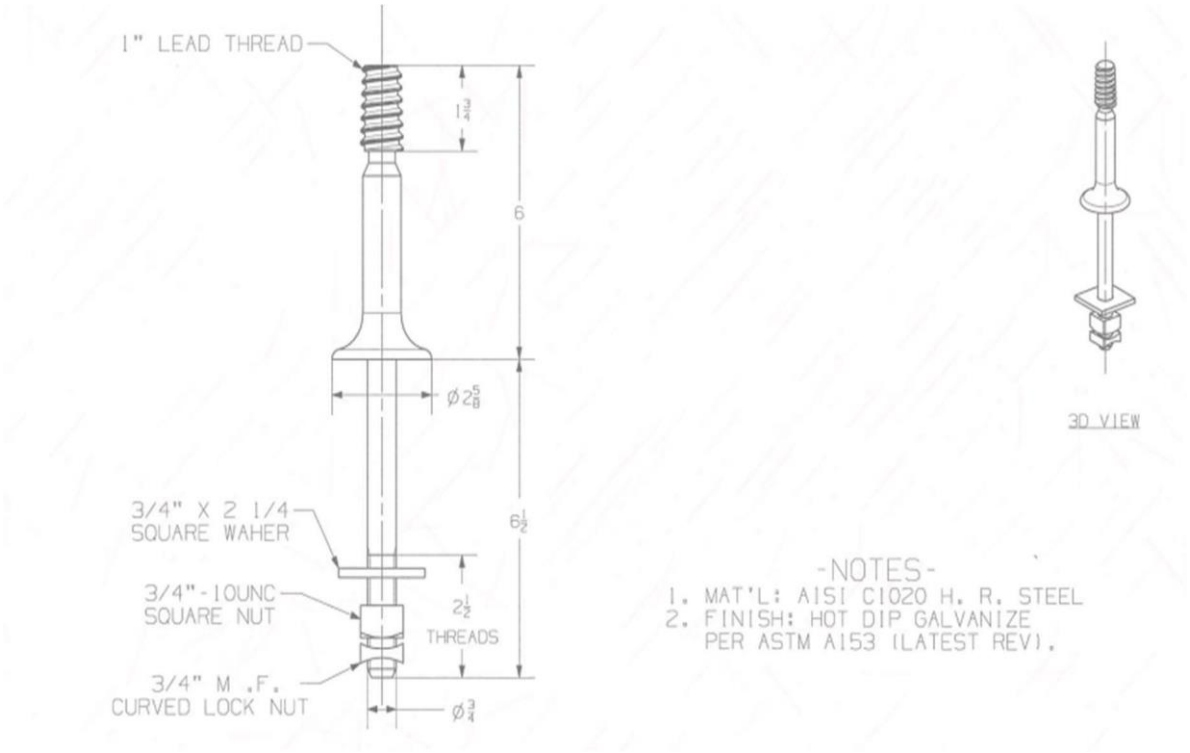

General

Coating

Galva

nized, ASTM A-153EU RoHS

Indicator No

Material Steel

Dimensions

Distance

From Pole N/A Length - Threaded Area 2.50 Weight 2.71 lb

4.42 LH099: PIN, POLE TOP 20" x 1"

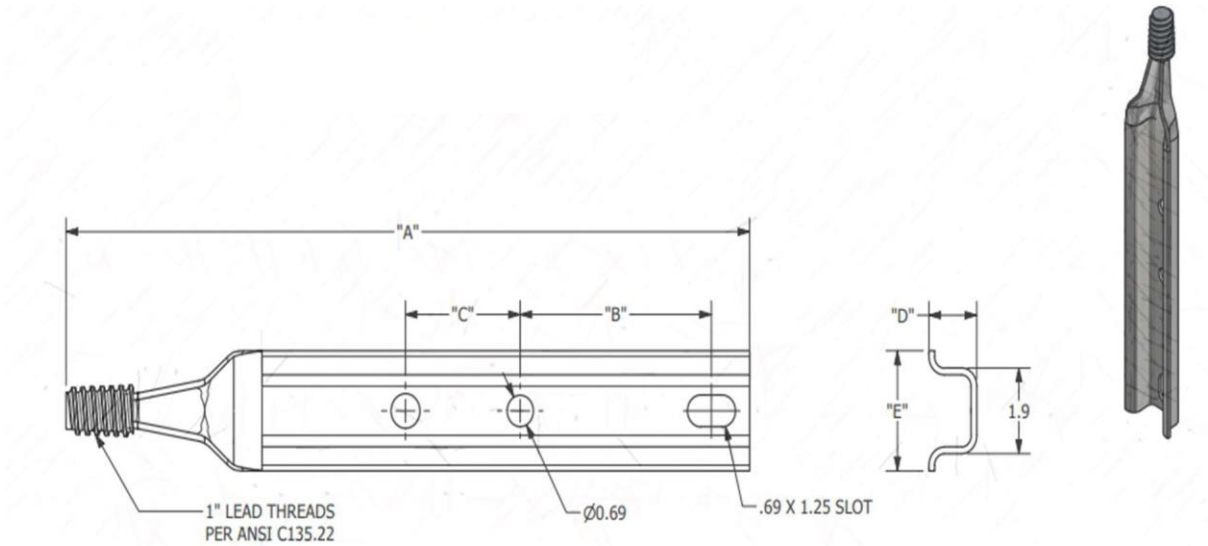

General

Coating

Galva

nized, ASTM A-153

Material Steel

Style Straight Base

Dimensions “A”-20 Inches “B”-5 Inches “C” 3 Inches “D”- 3 Inches“ E” – 2.6 inches

4.43 LH102: RACK, 4 SPOOL

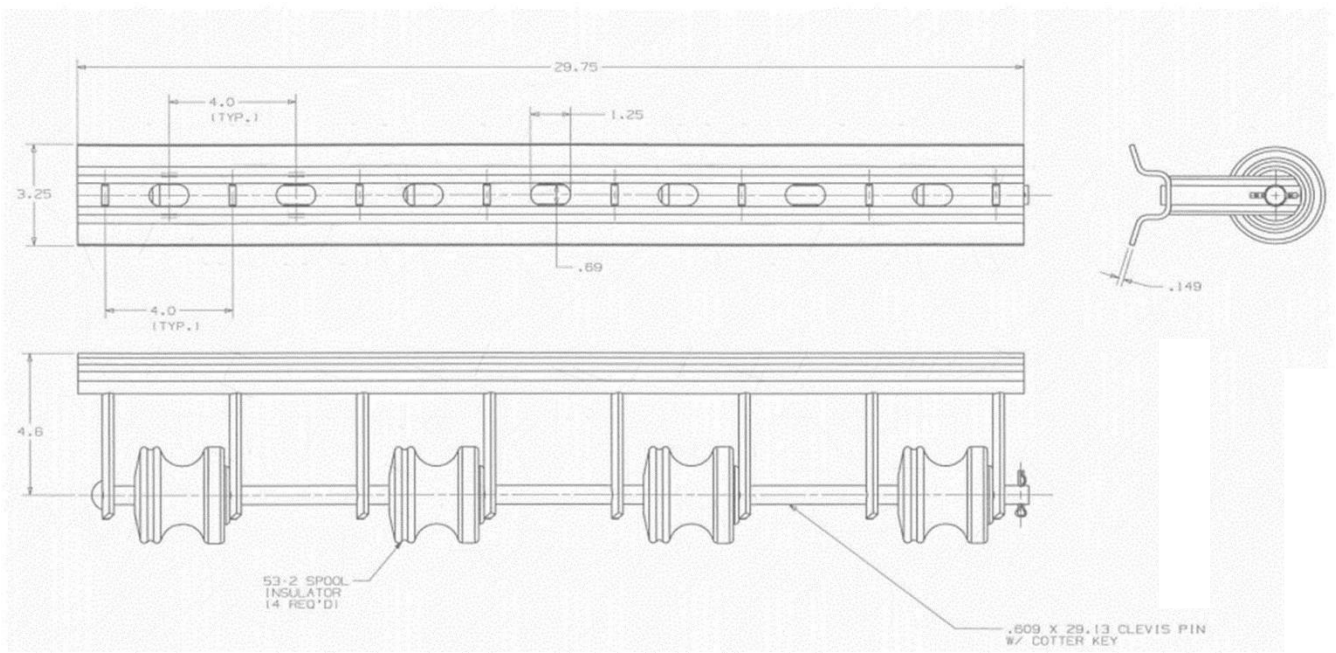

General

Coating	Galvanized, ASTM A-153
EU RoHS Indicator	No
Material	Steel
Style	4 Wire

Dimensions

Length	29.75 in
Weight	15 lb
Width	3.25 in

4.44 LH103: ANCHOR RODS TWIN EYE 5/8" X 8'

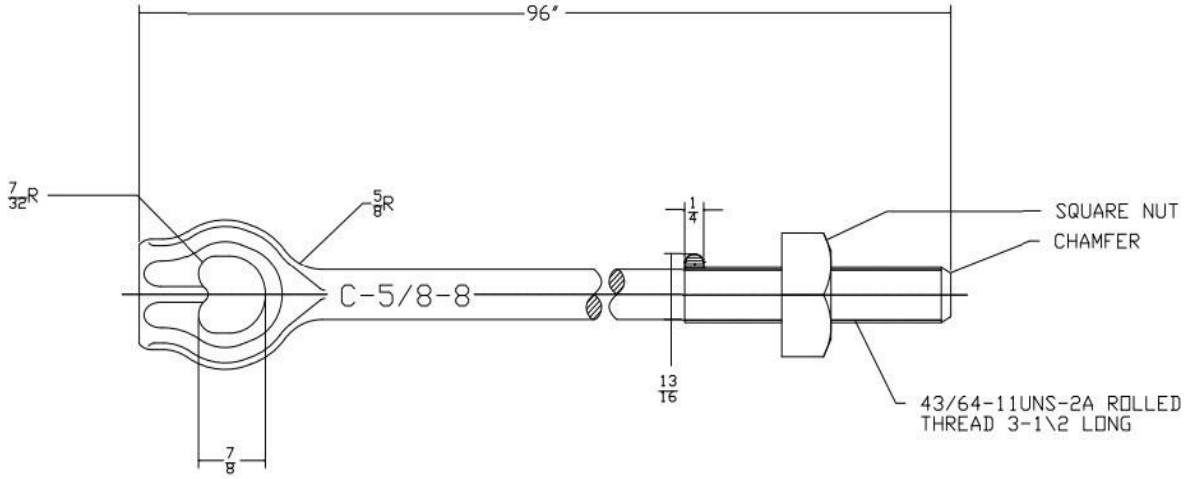

General

Application	Earth Tension Anchoring
Coating	Galvanized, ASTM A-153
Eyenut Style	Twineye Min. Tensile Strength 16000 lb Type Anchor Rod

Note

Ultimate strength ratings apply to properly installed anchors only. Failure to install within 5 ° of alignment withthe guy load may significantly lower strength.

4.45 LH104: ROD, ANCHOR THIMBLEYE 5/8" X 7’

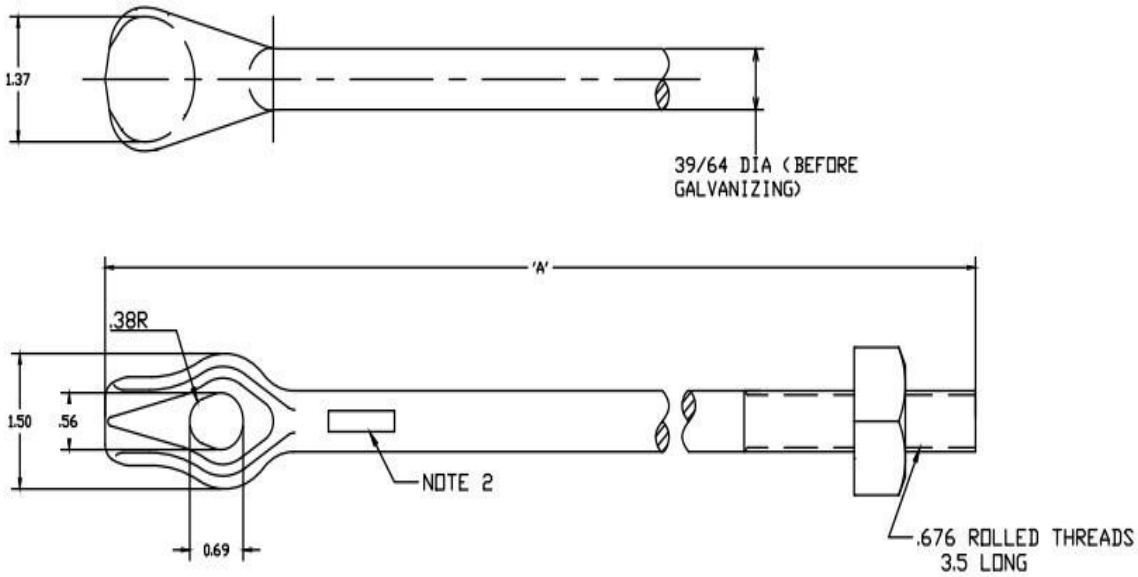

General

Application	Earth Tension Anchoring
Coating	Galvanized, ASTM A-153
Eyenut Style	Thimbleye Min Tensile Strength 16000 lb Type Anchor Rod

Dimension

“A” – 7ft

Note

Ultimate strength ratings apply to properly installed anchors only. Failure to install within 5 ° of alignment withthe guy load may significantly lower strength.

4.46 LH105: WASHER, RD GALV 2" X 13/16"

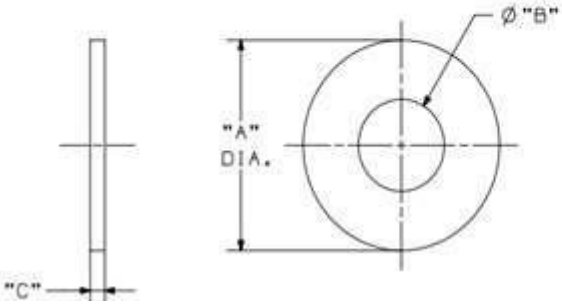

Dimension

"C" – 9 GA "A" – 2 inch "B" – 13/16 inch

General

Coating	Galvanized, ASTM A-153
Material	Steel

4.47 LH106: HOOKS, SAFETY

General Has a Ball End ANSI-52Use as a safety hook.

Minimum working load 25,000 lbs.

4.48 LH107: SCREW , F.D. LAG 3/8 " X 3 "

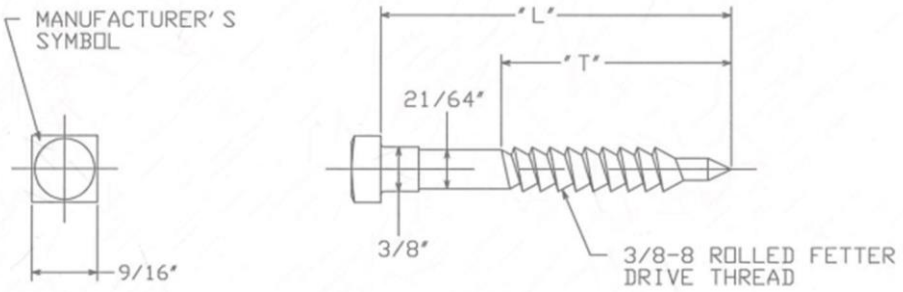

General

Coating	Galvanized, ASTM A-153
Material	Steel
Style	Fetter Drive with Pilot Point
Dimensions	**"**L" – 3 inches"T" – 2 inchesWeight0.09 lb.

4.49 LH108: SHACKLE ANCHOR 4-5/16" x 1"

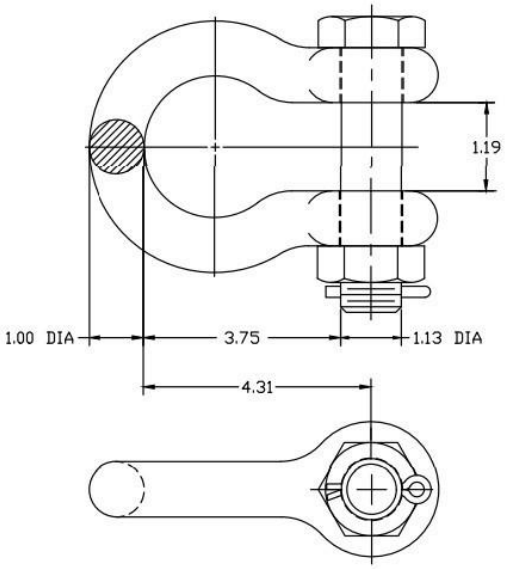

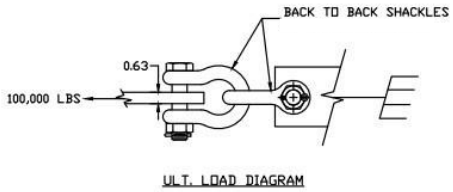

NOTES:
1. MATERIAL- BODY- GALV. FO
BOLT & JAM NUT
COTTER PIN- STA
2. ALL FERROUS PARTS ARE H
PER ASTM A153-LATEST RE
3. WEIGHT 5.5 LBS
4. 100,000 LBS ULT. STR.

General

Material	Steel		
Material - Pin (Clevis)	Galvanized Steel	Material - Pin (Cotter)	Stainless Steel Min.
Strength Rating	100,000 lb		

Note:

All ferrous parts must be hot dip galvanize as per ASTM A153 latest rev.

4.50 LH110: WASHER, FLAT SQUARE 3/4"

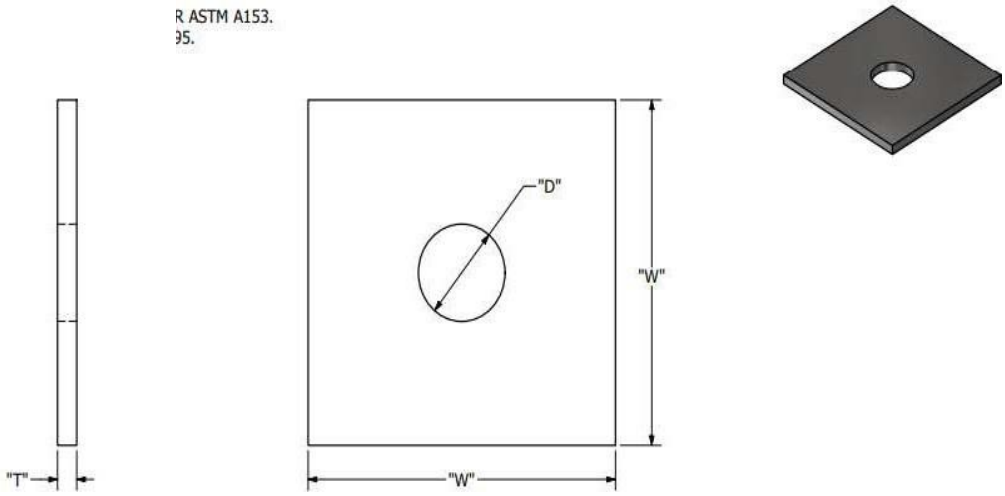

Dimension

"T" – 0.5 in

"W" – 4 in

"D" – 0.81in

General

Coating	Galvanized, ASTM A-153
Material	
Type	Steel
Washer	

4.51 Staples: LH111, LH112 and LH113

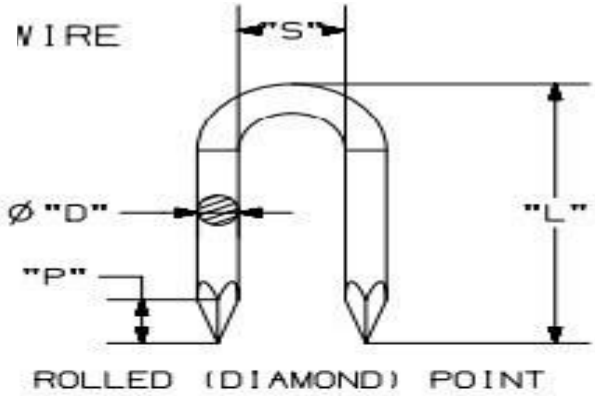

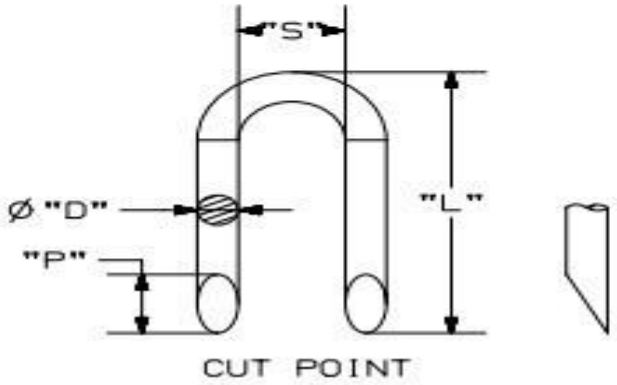

General

Coating

Galva

nized, ASTM A-153

Material Steel

Wire

Item #	Finished	Dimension (ins.)			
		"L"	"S"	"D"	"P"
LH111	Hot Dip Galv.	2	5/8	0.162	9/16
LH112		1	5/16	0.120	1/4
LH113		3	1-1/16	0.250	7/8

4.52 LH114: STEP DETACHABLE POLE

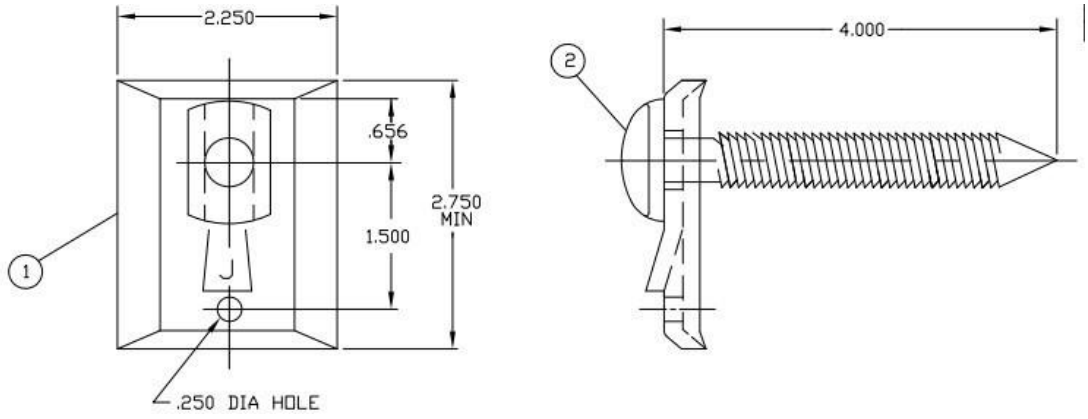

Material: Hot Dip Galvanized, Steel

- Special 9/16 x 4” fetter drive lag screw permanently attaches the mounting plate to the pole
- Twisting is prevented by a punched projection
- Nail hole is provided
- Can be hung

from lineman’s belt

When attached,

extension is 5 1/2”

4.53 LH115: STEP, POLE 5/8 X 10"

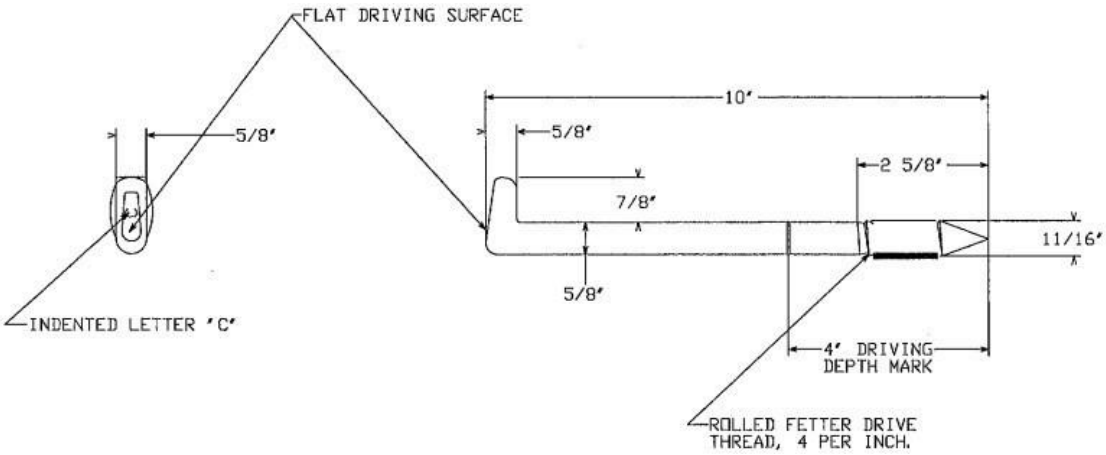

General

Coating

Galvani

zed, ASTM

A-153Material

5/8" x

10" Steel

Style Wood Pole & Concrete Pole

NOTE: Pole Step must not be welded at the indication mark.

4.54 LH117: D/E THIMBLE - DUCTILE

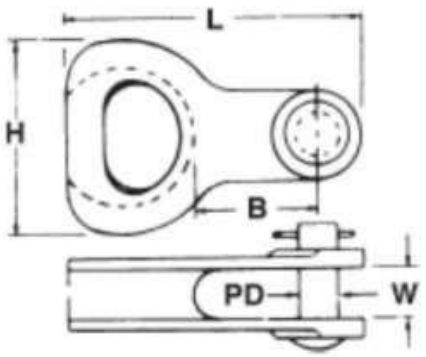

Provides a convenient and efficient means for loop dead ending of steel static wire and bare or insulatedaluminum or copper phase wires. Magnetic induction heating will occur.

Materials:

Body –

Ductile

Iron,

Galvanized

Clevis Pin –

Galvanized

Steel Cotter

Pin - #302

Stainless

Steel

Dimension:

"H" – 3-1/4 in. (82.55mm)

"B" – 2-5/16 in. (58.14mm)

“L” – 5-3/8 in. (136.53mm)

“W” – 7/8 in. (22.23mm)“PD” – ¾ in. (19mm)Weight: 2.5 lb.

4.55 LH118: BOLT, 5/8 X 18”

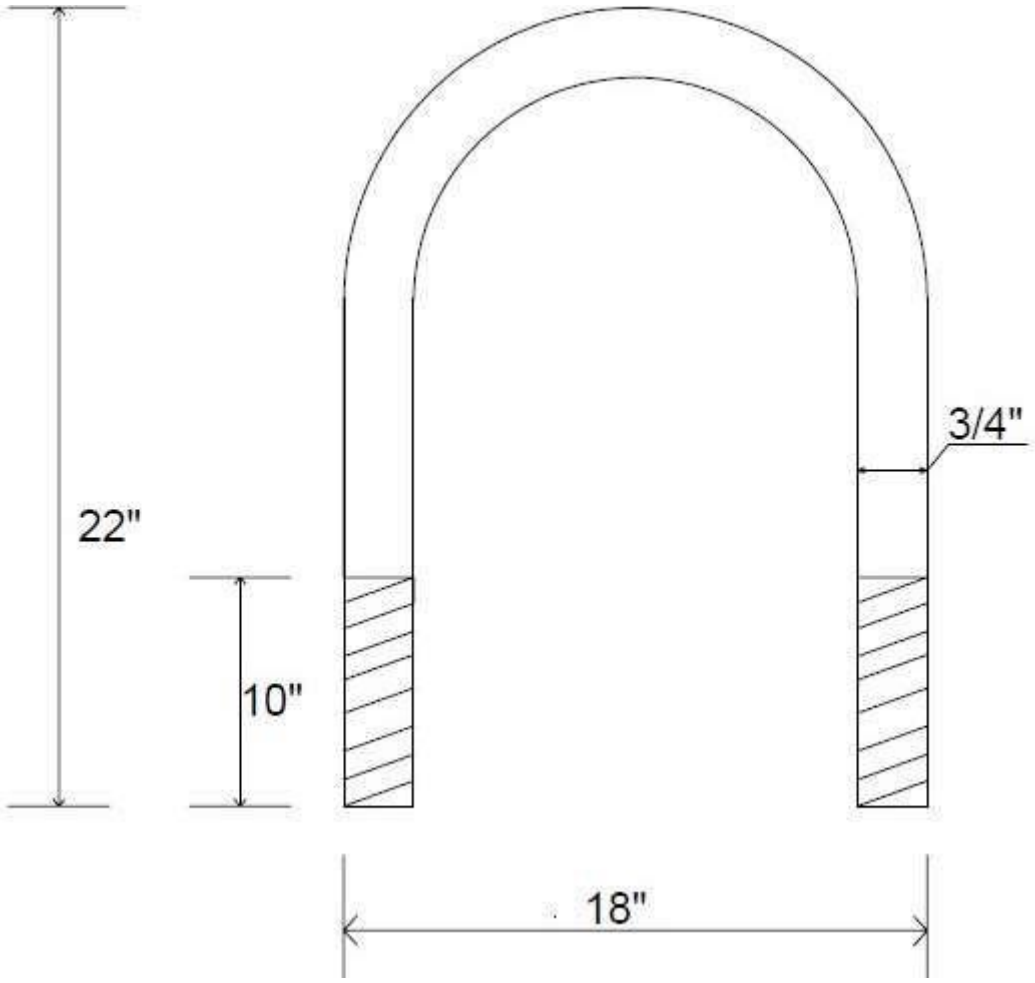

General

Material:	Steel
Coating:	Dip Galvanize, ASTM A-153
Thickness Diameter:	¾ in.

4.55 LH121: WASHER, 3/4" X 11/16" ROUND 5/8

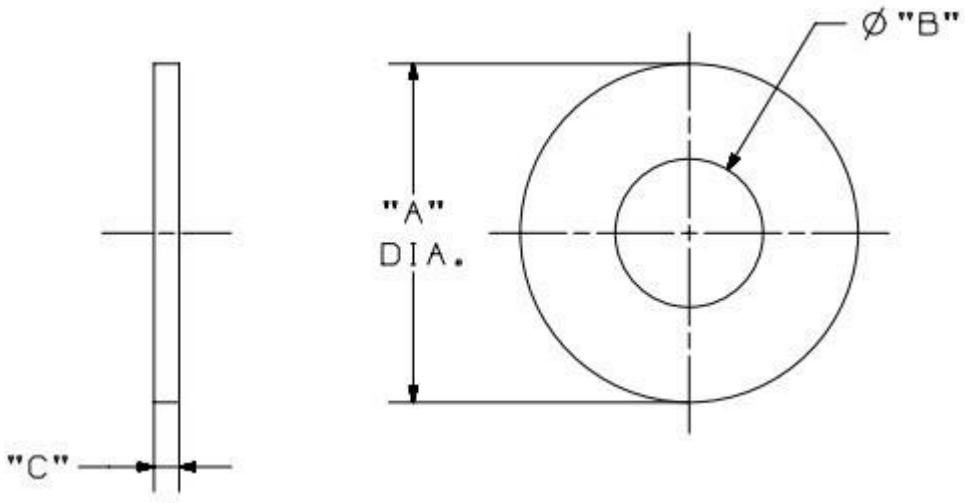

General

Coating

Galva

nized, ASTM A-153

Material Steel

Dimension

"A" – 1-3/8 ins.

"B" – 11/16 ins.

"C" – 11 GA.

4.56 LH122: Washer, Flat S.S ½”

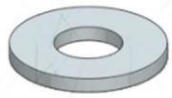

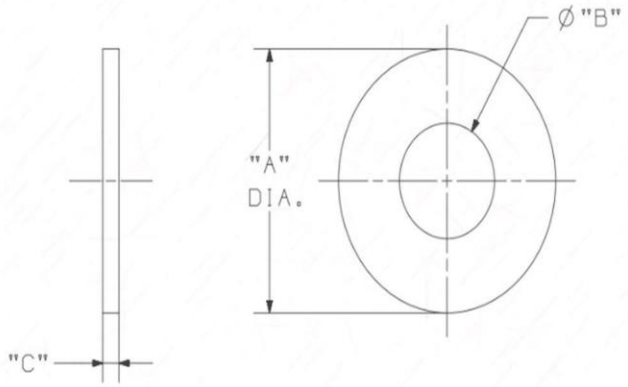

General

Coating

Galva

nized, ASTM A-153

Material Steel

Dimensions “A” – 1-

3/8 in“B” – 9/16 in

“C” – 12 GA.

Weight – 0.04 lb

4.57 LH123: WASHER, CURVED 3/4"

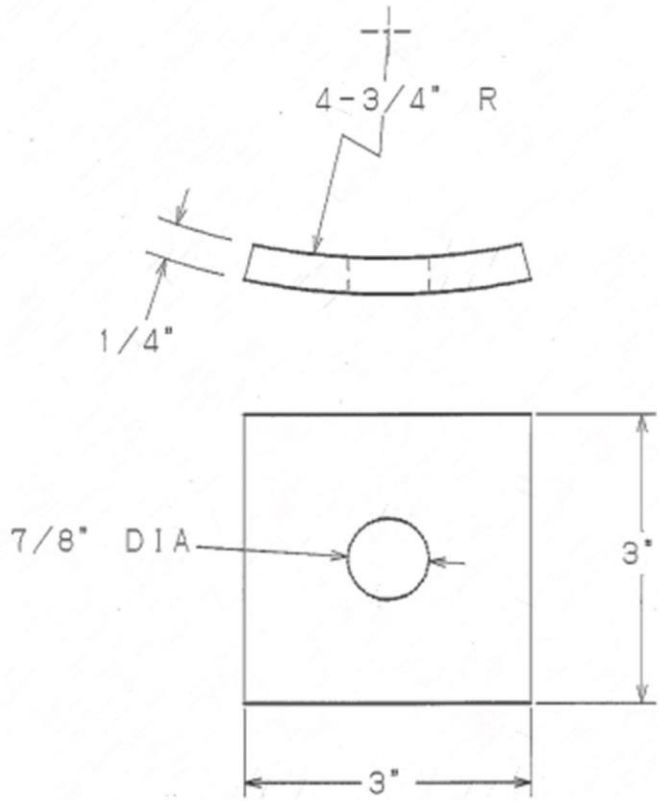

General

Coating

Galva

nized, ASTM A-153

Material Steel

4.58 LH124: WASHER, CONIC 1/2"

Conical washer should be interposed between one of the flat washers and either the bolt head or the nut, withthe hollow of the Belleville washer placed against the flat washer.

Conical washers must design to maintain substantial force when tightened to NEMA-recommended values andfinely finished to avoid galling.

Item #	Bolt Size	Nominal Dimensions		
		Thickness	Internal Dia.	Overall Dia.
123	1/2	0.10	0.53	1.06

4.59 LH125: WASHER, CURVED SQUARE 5/8"

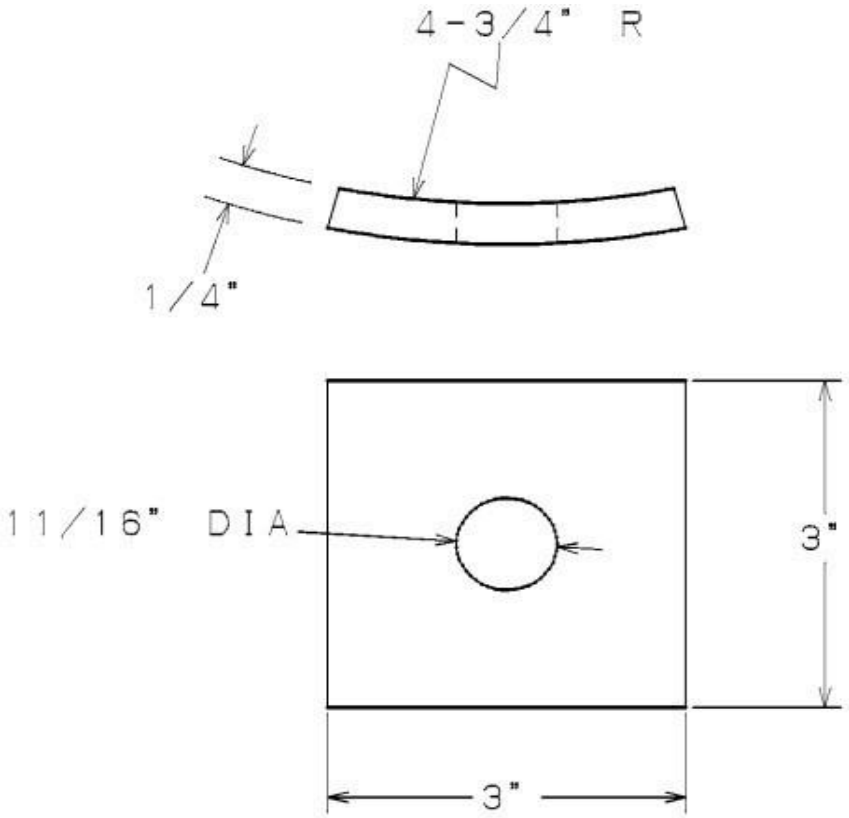

General

Coating

Galva

nized, ASTM A-153

Material Steel

4.60 LH128: WASHER, SPLIT S.S 1/2"

General

Material: Stainless Steel

Application: use to accommodate 1/2 in. bolt.

4.61 LH129: ANCHOR, WRENCH 66"

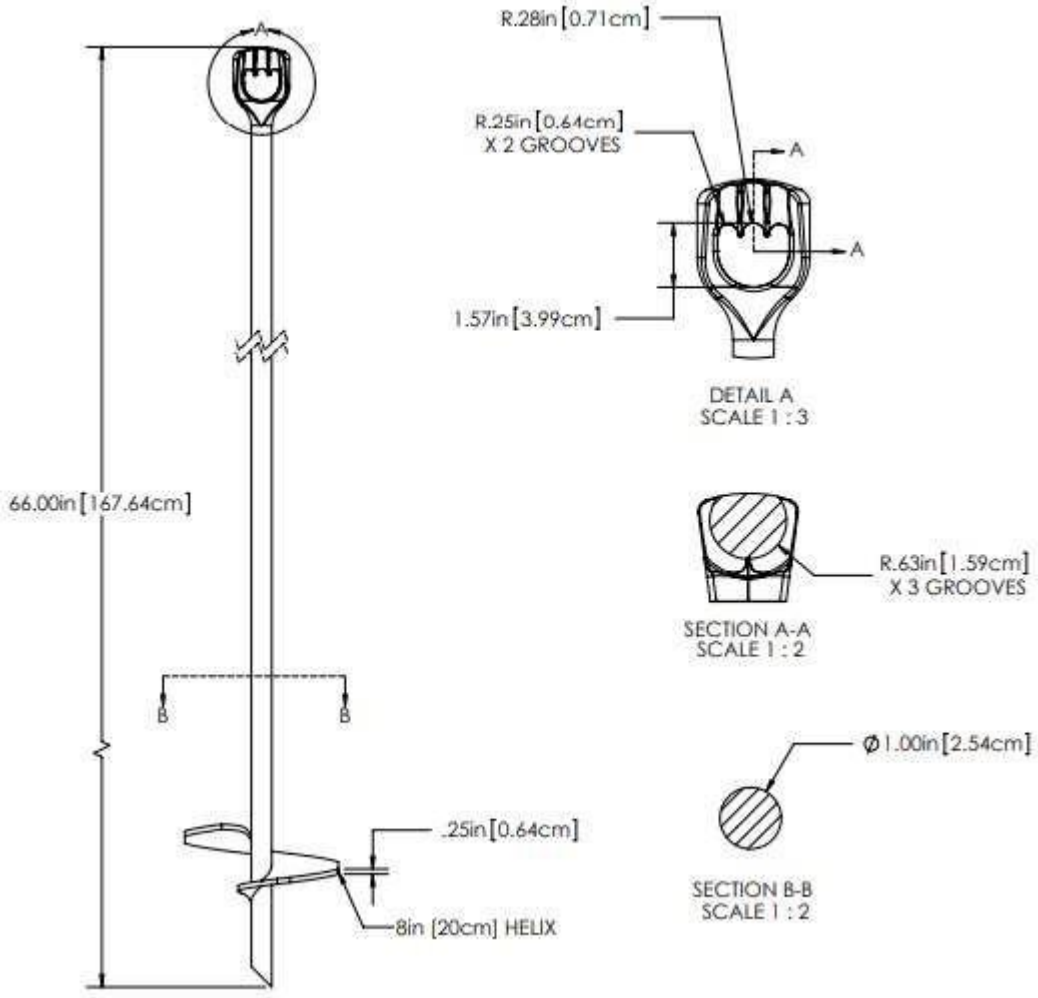

Notes

No wrench anchor must be hot dip galvanize as per ASTM A123 after fabrication.

Dimension

Type:	Tripleye
Helix Diameter:	8 ins.
Rod Diameter:	1 ins.
Rod Length:	96”.

4.62 LH130: PIN, Long Shank – 1” Thread X 11-1/2” Length

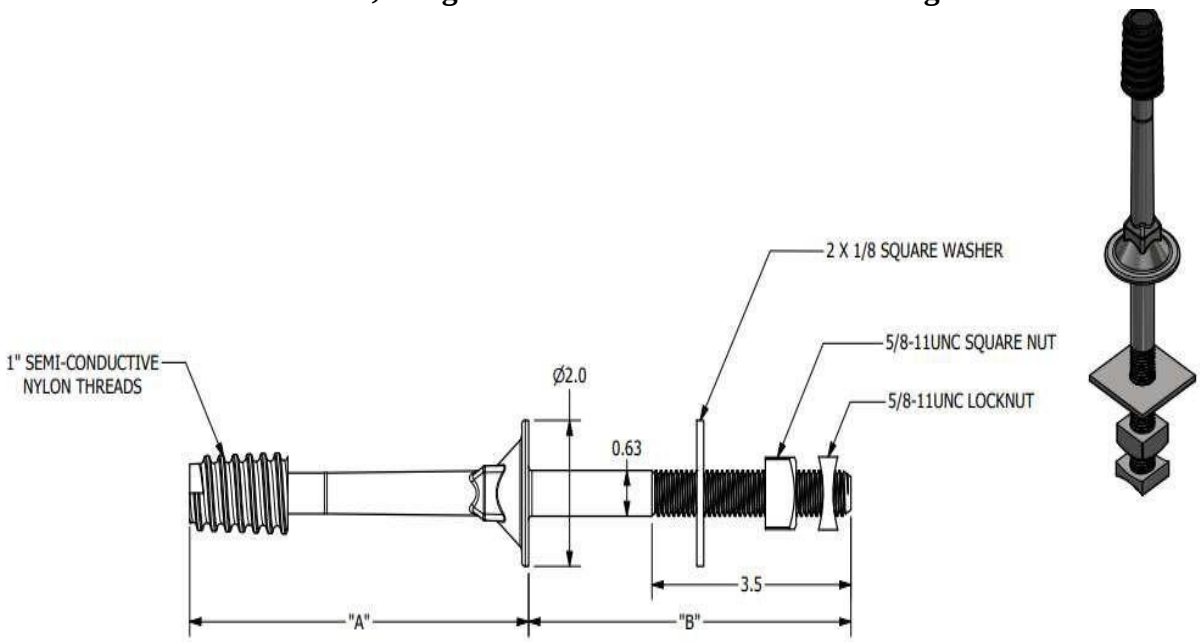

General

Coating	Galvanized, ASTM A-153
Material	Steel

Dimensions

“A” – 5 in

“B” – 6.5 in

Weight – 1.45 lb

4.63 LH126: WASHER, FLAT SQ # 6812 2" X 2" X 11/16 X 1/8 - 5/8"

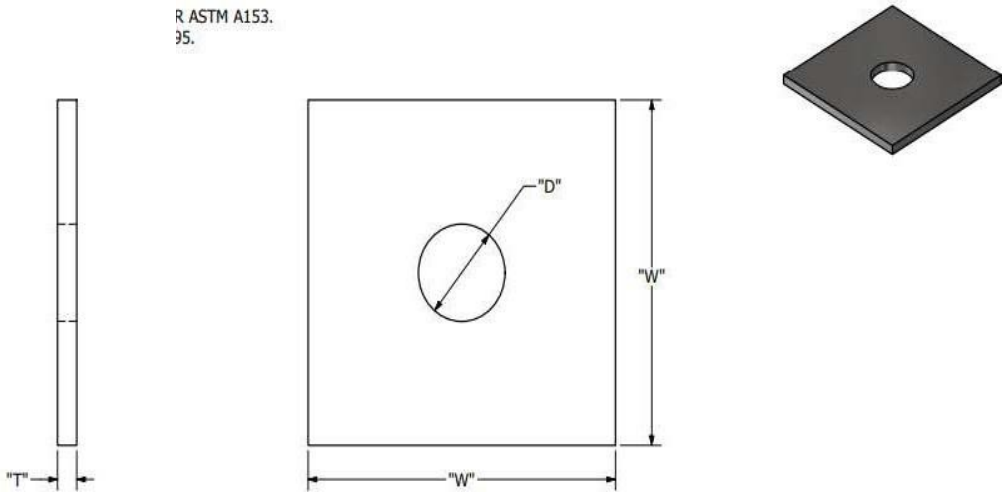

Dimension

“T” – 0.13in

“W” – 2in

“D” – 0.56in

General

Coating	Galvanized, ASTM A-153
Material	Steel
Type	Washer

4.64 LH127: WASHER, ROUND GALV - 3/8"

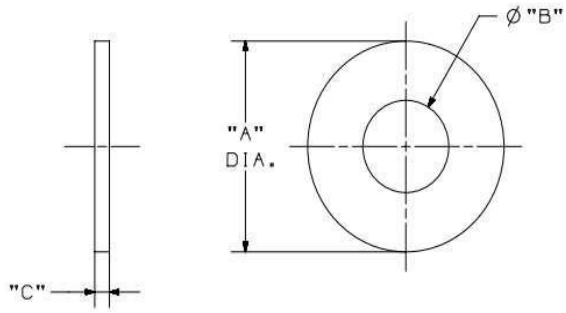

Dimension

"C" – 14 GA"A" – 1inch "B" – 7/16 inch

General

Coating	Galvanized, ASTM A-153
Material	Steel

4.65 LH131: Strain Plate

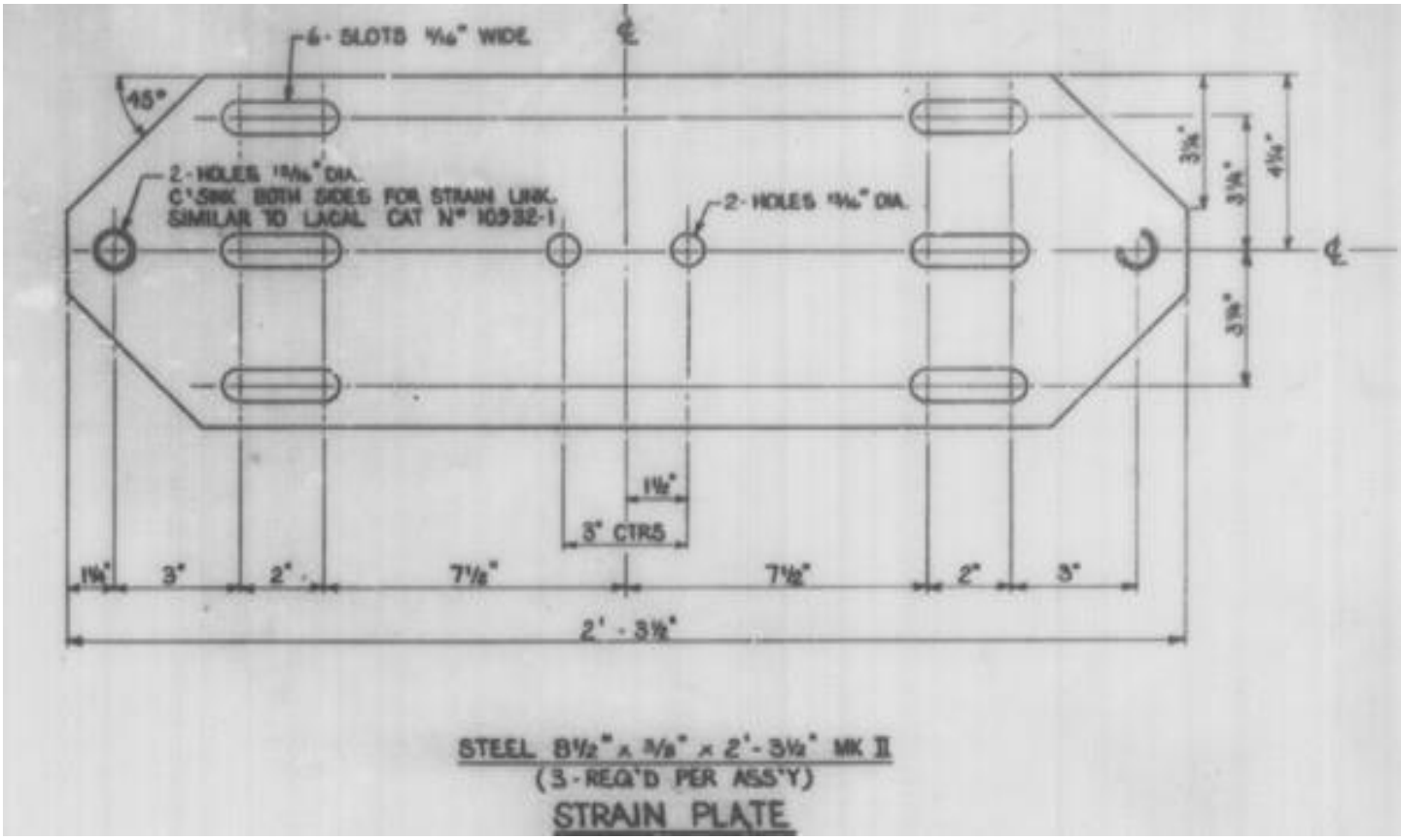

All dimension is in inches. Diagram is not drawing to scale.

Material:	Steel
Coating:	Dip Galvanized, ASTM A-153
Thickness:	3/8 in.
Circle Dia.	7/8 in.

4.66 LH132: Grip Gain Washer

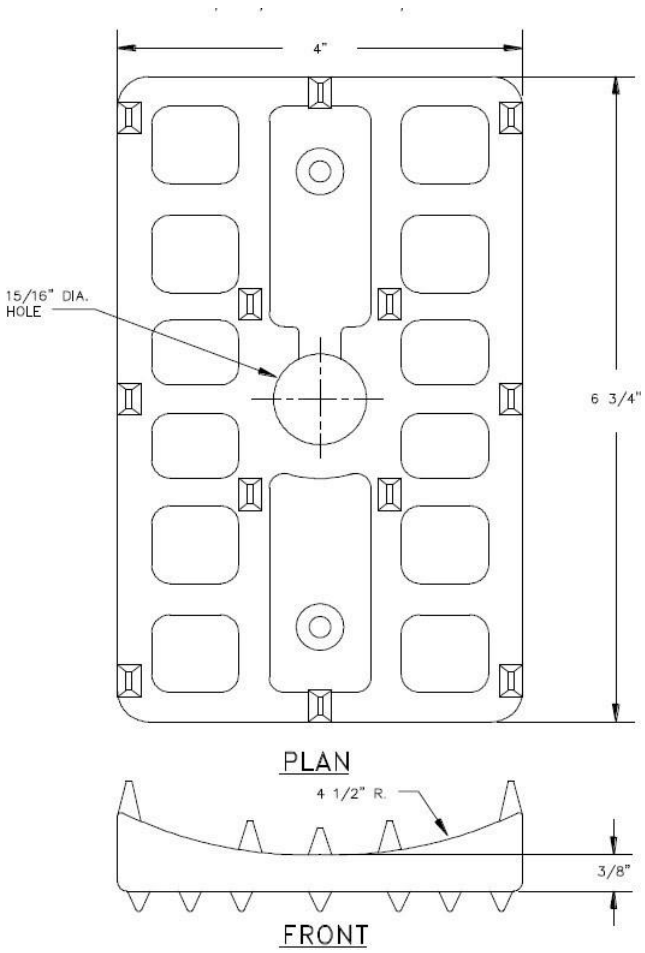

General

Coating

Galva

nized, ASTM A-153

Material Steel

Standard ASTM A153, ASTM B695

Dimensions

Thickness: ¼ ins.

4.67 LH133: Ground Wire Corner Bayonet

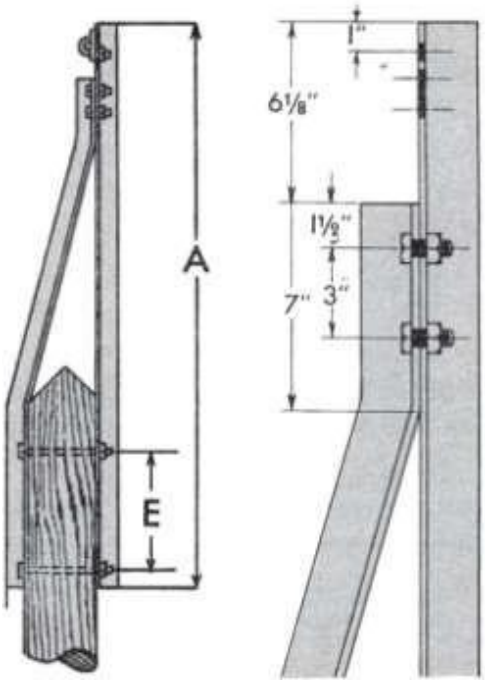

Application

Ground wire bayonets are used for supporting overhead ground wires on our Transmission (69kV) Network **Dimension (inch)**"A" – 66 inch "E" – 15 inch
Angle Size – 2 x 2 x ¼

Material

Steel hot dip galvanized

- Corner bayonets consist of two angle sections and two 1/2" bolts for fastening them together.
- One angle is offset to fit 8" diameter poles; however, the legs shall be spread apart or pushed together tofit other diameters.
- The mounting bolts in the bent legs shall be slotted to allow for any pole boring inaccuracy.

4.68 LH134: Ground Wire Straight Bayonet

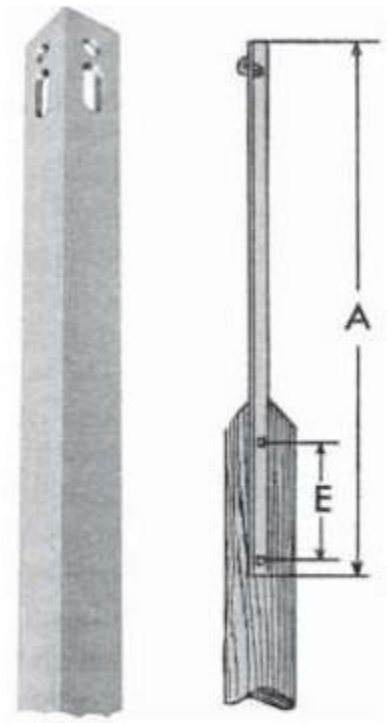

Application

Ground wire bayonets are used for supporting overhead ground wires on our Transmission (69kV) Network **Dimension (inch)**"A" – 48 inch "E" – 12 inch
Angle Size – 2½ x 2½ x ¼

Material

Steel hot dip galvanized

- Straight type bayonet consists of one angle with clamp holes punched in both legs to permit mountingthe bayonet to either the face or the side of the pole.
- Straight bayonets shall have a 7/16" diameter hole at the bottom for a ground lug if required.

4.69 LH135: Ground Clamp

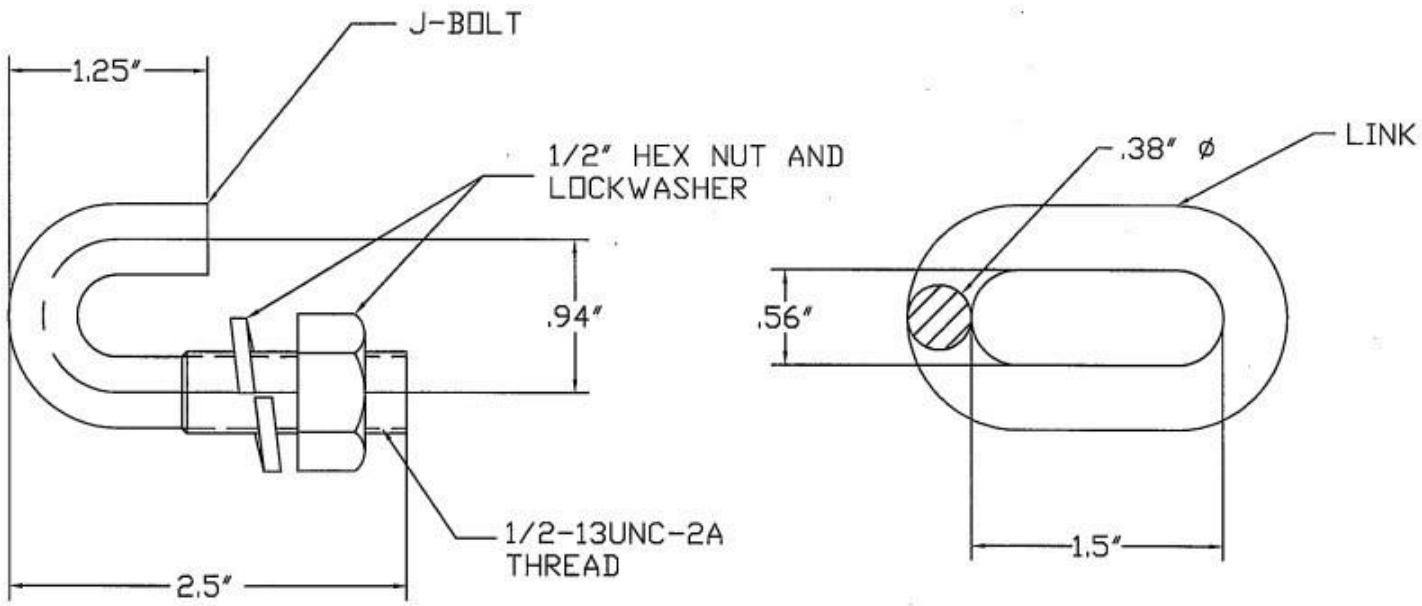

Application

Ground Wire Clamp is used to attached ground or static wires to bayonets. The clamp shall be a J-bolt whichfits into 15/16" spaced holes at top of bayonet style ground wire bracket.

General

Coating:

Galva

nized, ASTM A-153

Material: Steel

4.70 LH136: Cross Arm for Terminal Pole

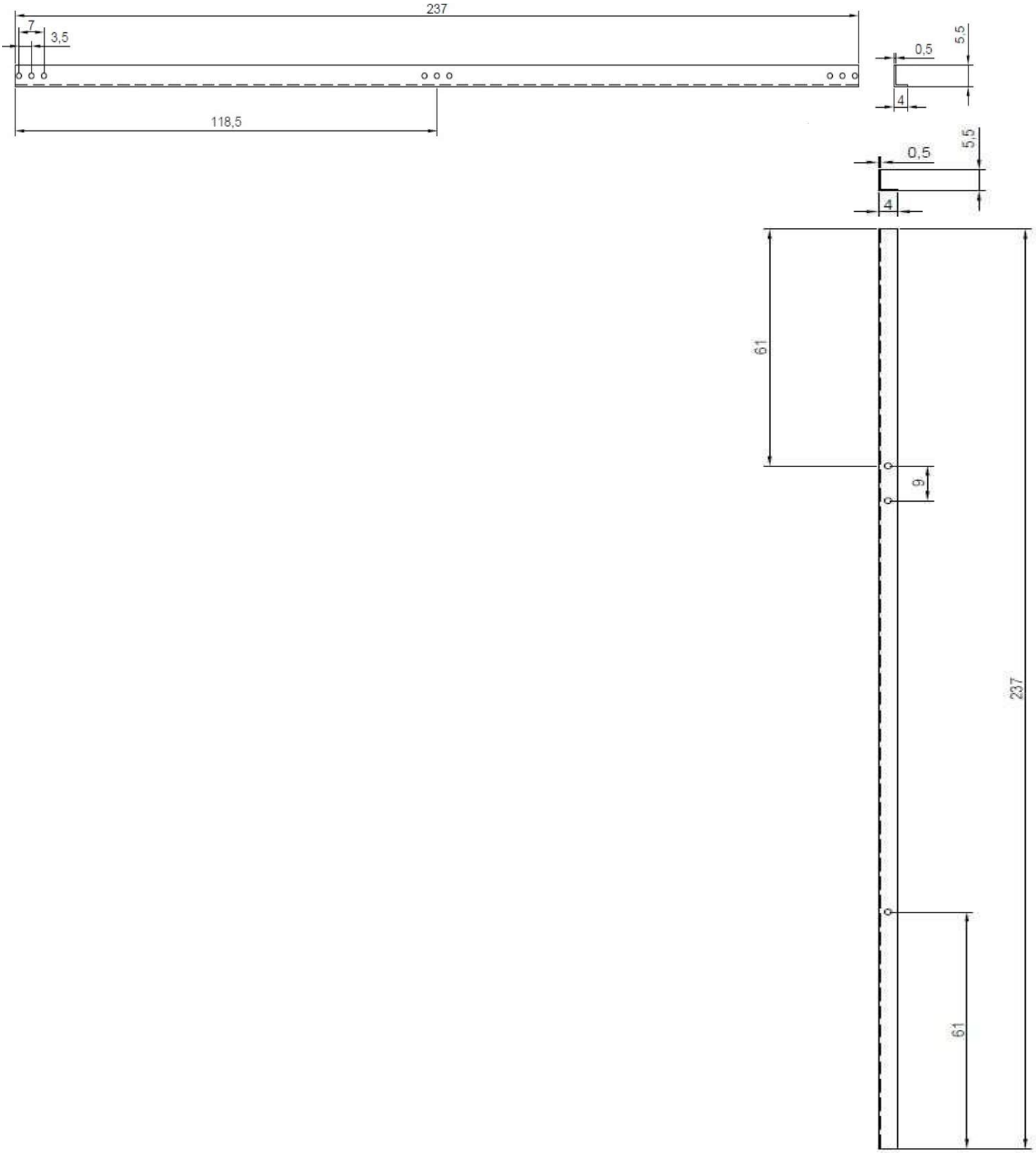

General

Material: Steel

Coating: Hot Dip Galvanize

Information

- All dimensions are in inches.
- Drawing is represented in a third angle projection, which shows it is one component.
- Hole shall be able to accommodate ¾ in. bolts

4.71 LH139: ANCHOR, WRENCH 96"

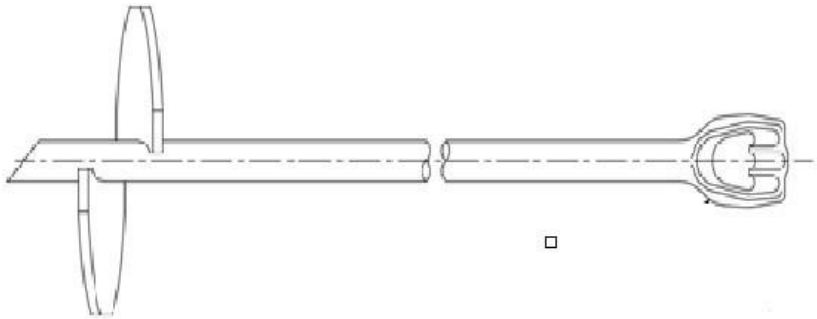

Notes

No wrench anchor must be hot dip galvanize as per ASTM A123 after fabrication.

Dimension

Type:	Tripleye
Helix Diameter:	10 ins.
Rod Diameter:	1-1/4 ins.
Rod Length:	96”.

4.72 LH140: ROD, ANCHOR THIMBLEYE 3/4" X 7’

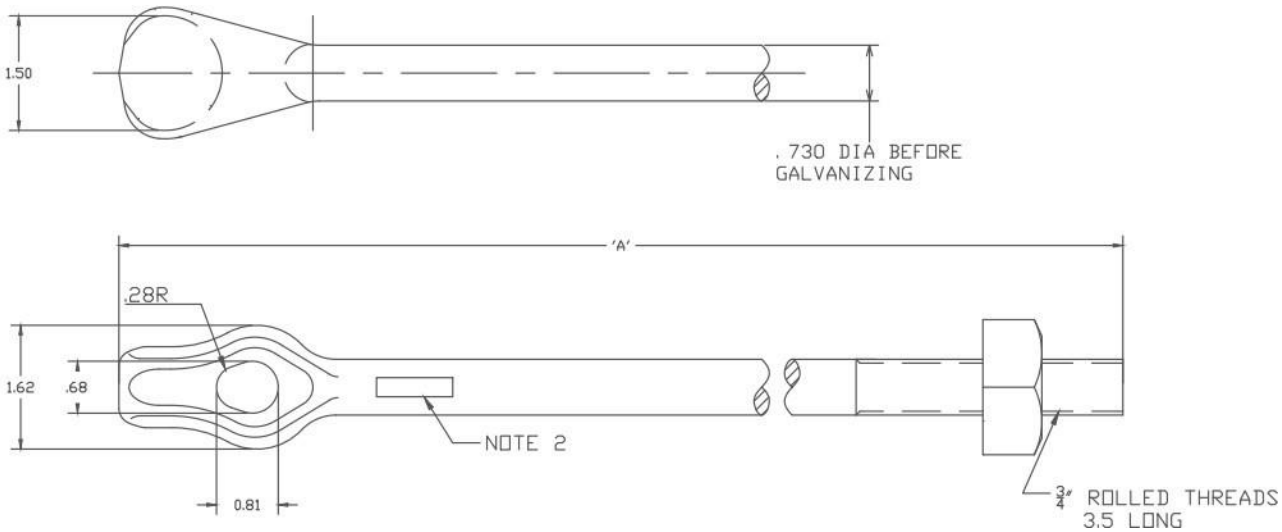

General

Application Earth Tension Anchoring

Coating Galvanized, ASTM A-153

Eyenut Style ThimbleyeMin Tensile Strength 23000 lb Type Anchor Rod

Dimension

“A” – 7ft

Note

Ultimate strength ratings apply to properly installed anchors only. Failure to install within 5 ° ofalignment withthe guy load may significantly lower strength.

5.0 Guarantee

Vendor shall guarantee all line hardware materials against defects arising out of faulty design, workmanship, ordefective material for a period of one (1) year from the date of installation or two (2) years from the date of delivery, unless and otherwise specified in tender documents.

6.0 Drawings

The bidder shall furnish catalogues, literature, operation, and detailed dimensional drawings of complete bid forease of evaluation. **Additionally, if a bidder has similar features or dimension like that mention within thisspecification, he/she is required to mention all literature, detail dimensional drawing and materials composition**. This option will allow the evaluators to ascertain its capabilities and comment on its operation.

7.0 Quality Assurance

The manufacturer shall be certified in accordance with ISO 9001. The supplier must provide a copy of a validcertificate along with his quote. Relevant manuals shall be presented upon request.

Technical Specification for Insulators

1.0 Glossary

GPL *Guyana Power and Light Incorporated*

2.0 Scope

This specification sets out the technical requirements for Insulators to be used on distribution (rated 15kV) and transmission (rated 110kV) network, by GPL.

3.0 Environmental Conditions

3.1 The insulators to be supplied against this specification shall be satisfactory suitable for s continuous operation under the following tropical coastal conditions.

3.1.1 Maximum altitude above mean sea level less than 1,000m;

3.1.2 Maximum ambient air temperature 40^0C;

3.1.3 Maximum daily average ambient air temperature 30^0C;

3.1.4 Minimum ambient temperature15^0C; and

3.1.5 Maximum relative humidity 100%.

3.2 The insulators shall be designed and protected for use in exposed, heavily polluted,and salty, corrosive and humid tropical coastal atmospheric conditions.

4.0 Requirements

The requirements will be listed in the following order as shown in the table below:

Item #	Description
INSUL01	INSULATOR, PINTYPE 55 - 5 1"
INSUL02	INSULATOR , RACK / SPOOL 53 - 2
INSUL03	INSULATOR 110 KV HORIZONTAL
INSUL04	INSULATOR D/E SURP 15 kV
INSUL05	INSULATOR, GUY-STRAIN 5 1/2 # 54-3
INSUL06	INSULATOR, 110KV VERTICAL W/CLAMP TOP POLYMER
INSUL07	INSULATOR, 110KV. HORIZONTAL. W/CLAMP TOP POLYMER
INSUL08	Insulator Line Post 110 KV
INSUL09	Insulator Polymer 110 KV - ANSI Ball & Socket
INSUL10	INSULATOR, STRAIN 15KV 1/2" # 54 - 2
INSUL11	INSULATOR, SUSPENSION 110 KV.
INSUL12	WIREHOLDER, LARGE 3 1/8" X 2 1/2"

4.1 INSUL01: Pin Type Insulator

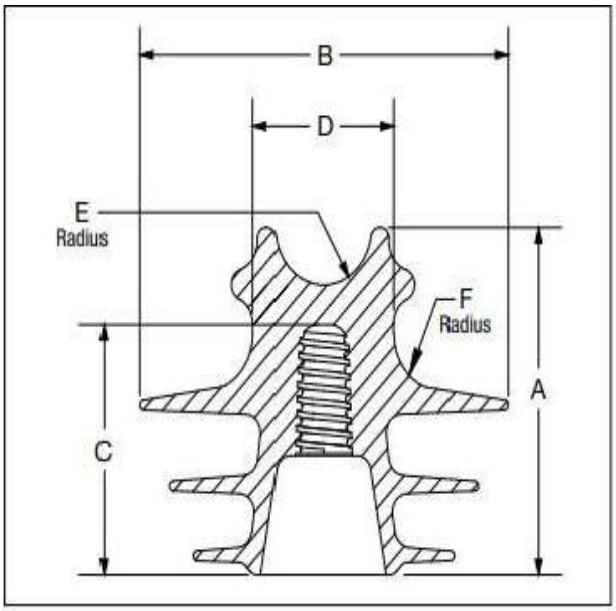

Item #	ANSI Class	Application	Mounting Pin Diameter	Approx. Unit Weight	Dimension (inches)					
					A	B	C	D	E (Radius)	F (Radius)
1	55-5	F Neck Tie Top	1”	1.3	5.7	6.1	4.35	2.875	1.0	0.813

Material: Polymer Blend3

Number of Skirts:

Max. Conductor O.D Top Groove: 2 in.

Max. Conductor O.D Side Groove: 1.625 in.

DIMENSIONS

Leakage Distance: 432mm (17.0 Inches)Dry

Arcing Distance: 180mm (7.1 Inches)

Minimum Pin Height: 152.4mm (6.0 Inches)

MECHANICAL VALUES

Cantilever Strength: 13.3kN 3000lbs.

ELECTRICAL VALUES

60 HV Flashover – Dry 80kV 60

HV Flashover – Wet 45kV

Impulse Flashover – POS 130kV

Impulse Flashover – NEG 150kV

4.2 INSUL02: Spool Insulator ANSI 53-2

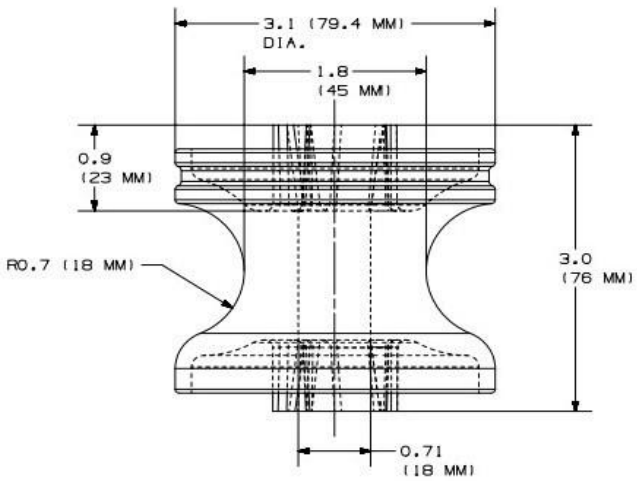

General

Material	Polymer Blend
Tensile Strength	3000 lb
Standards	ANSI/NEMA & EE1 Strength Class 53-2
Weight0.26 lb	

NOTE: Color preferable Grey or Black

4.3 INSUL04: Insulator D/E Suspension 15kV

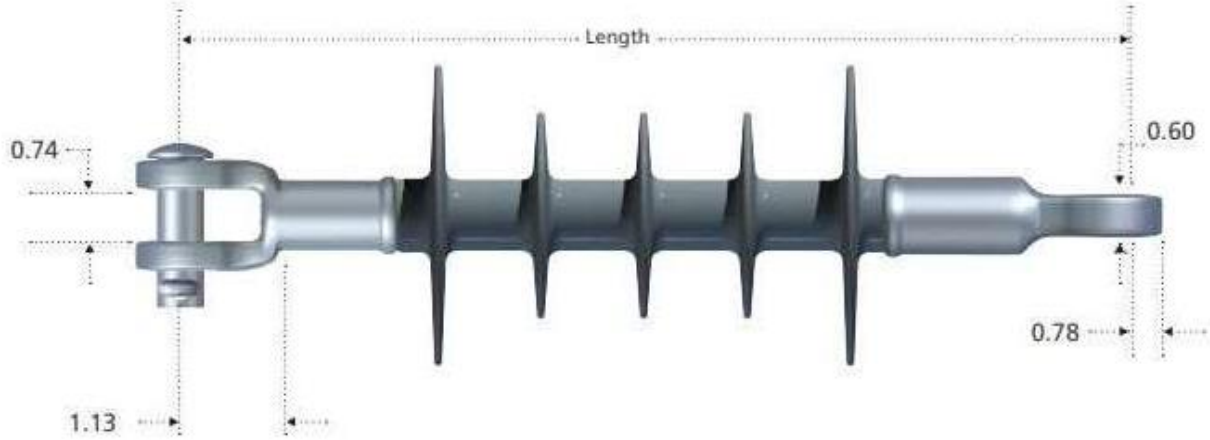

General

Application	Deadend
Cantilever Bending Strength - Routine	7500
Fitting - Ground/Base	Clevis
Fitting - Live Line End	Tongue
Material	ESP Rubber
Material - End Fitting	Steel
Material - Pin (Cotter)	Stainless Steel
Shed Style	Uniform
Min. Strength Rating - Ultimate	15000 lb
Tensile Strength	15 K
Tensile Strength - Routine	7500

Dimension

Rod Diameter	0.625 in.
Length	12.5 in.

Electrical Ratings

Creep and Leakage Distance	16 in. (406 mm)
Critical Impulse Flashover (CIFO) - Negative	170
Critical Impulse Flashover (CIFO) – Positive	150
Flashover Voltage - 60 Hz Dry	100kV
Flashover Voltage - 60 Hz Wet	80kV
Voltage - Line	15000 V
Withstand Voltage - 60 Hz Dry	90kV
Withstand Voltage - 60 Hz Wet	70kV

4.4 INSUL05, INSUL10: Guy Strain Insulator – ANSI Class 54

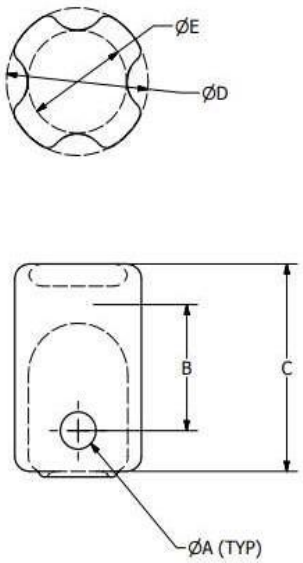

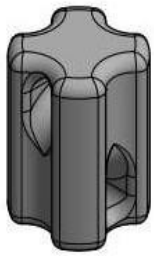

==NOTES==
1. INSULATES GUY WIRES USED TO ANCHOR POLE.
2. MEETS ANSI C29.1
3. MATERIAL: PORCELAIN, LIGHT GRAY

4.4.1 Insulates Guy wire used to anchor pole.

4.4.2 Meets ANSI C29.1

4.4.3 Materials: Porcelain

Item #	ANSI Class	Tensile Strength (Pounds)	Max. Cable Diameter	A	B	C	D	E
INSUL05	54-1	10,000	3/8	5/8	1-3/4	3-1/2	2-1/2	1-3/4
INSUL10	54-2	12,000	1/2	7/8	2-1/4	4-1/4	2-7/8	2-1/8

4.5 INSUL06: Line Post Insulator (110kV), Vertical Clamp top

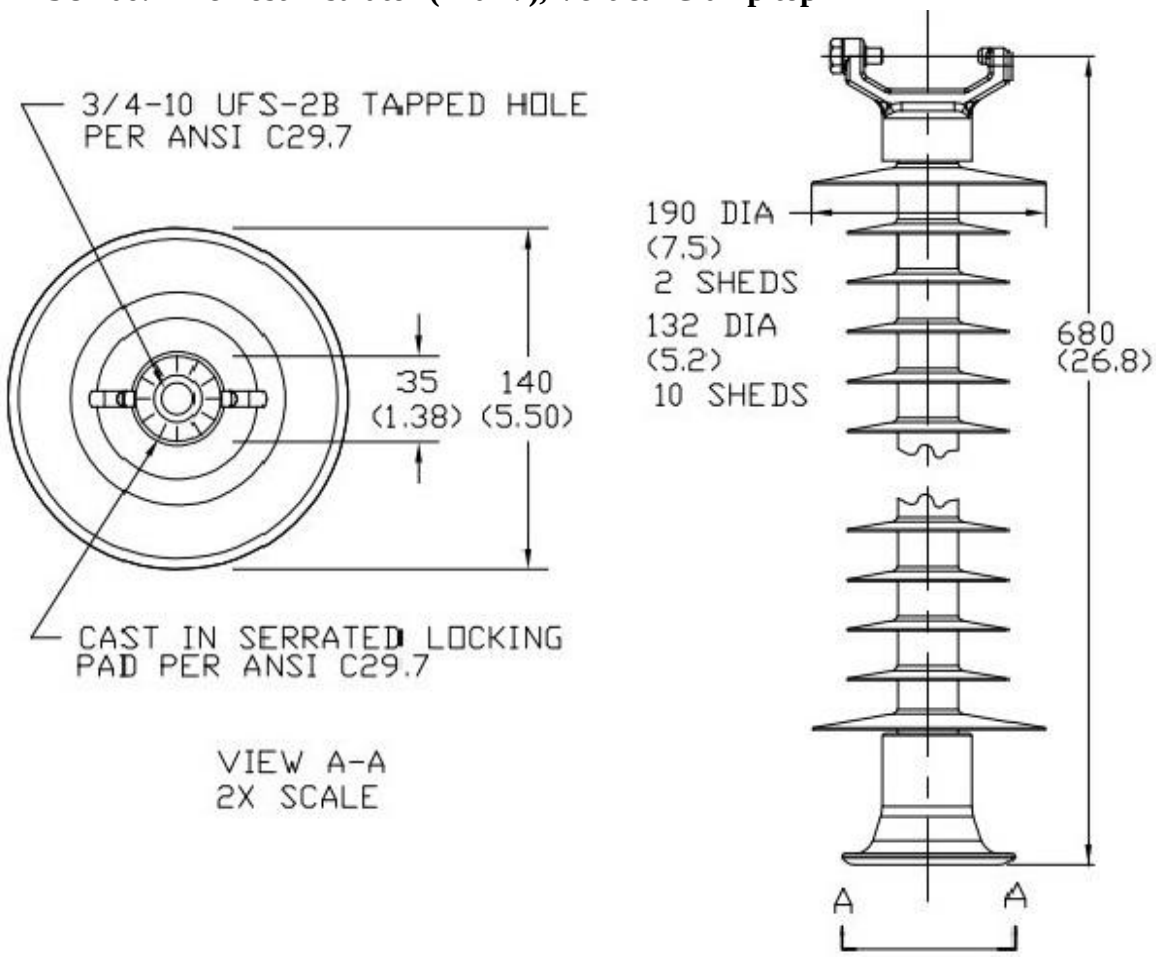

General

Application	Vertical Line Post
Cantilever Bending Strength - Max.	2500 Lbs (11.1 kN)
Cantilever Bending Strength - Routine	1235 Lbs. (5.5 kN)
Fitting -	Ground/Base 3/4" Stud Base
Fitting - Live Line End	Vertical Clamptop
Material	Silicone Polymer
Shed	Galvanized Steel
Material - End Fitting	2500 lb
Tension Range	

Dimensions

Angle	0
Diameter - Shed(s)	7.5" (190mm) / 5.2" (132mm)
Length - Effective	31 in
Rod Diameter	5/8 in
Thickness - Housing	0.15" (3.8mm)

Electrical Ratings

Arc Distance - Dry	22.2" (818mm)
Creep and Leakage Distance	82" (2083mm)
Critical Impulse Flashover (CIFO) – Positive	510 kV
Flashover Voltage - 60 Hz Dry	330 kV
Flashover Voltage - 60 Hz Wet	180 kV
Voltage - Line	110000 V
Voltage Rating	110 kV
Withstand Voltage - Lightning Impulse (Positive)	510 kV

4.6 INSUL07: Line Post Insulator (110kV), Horizontal Clamp top

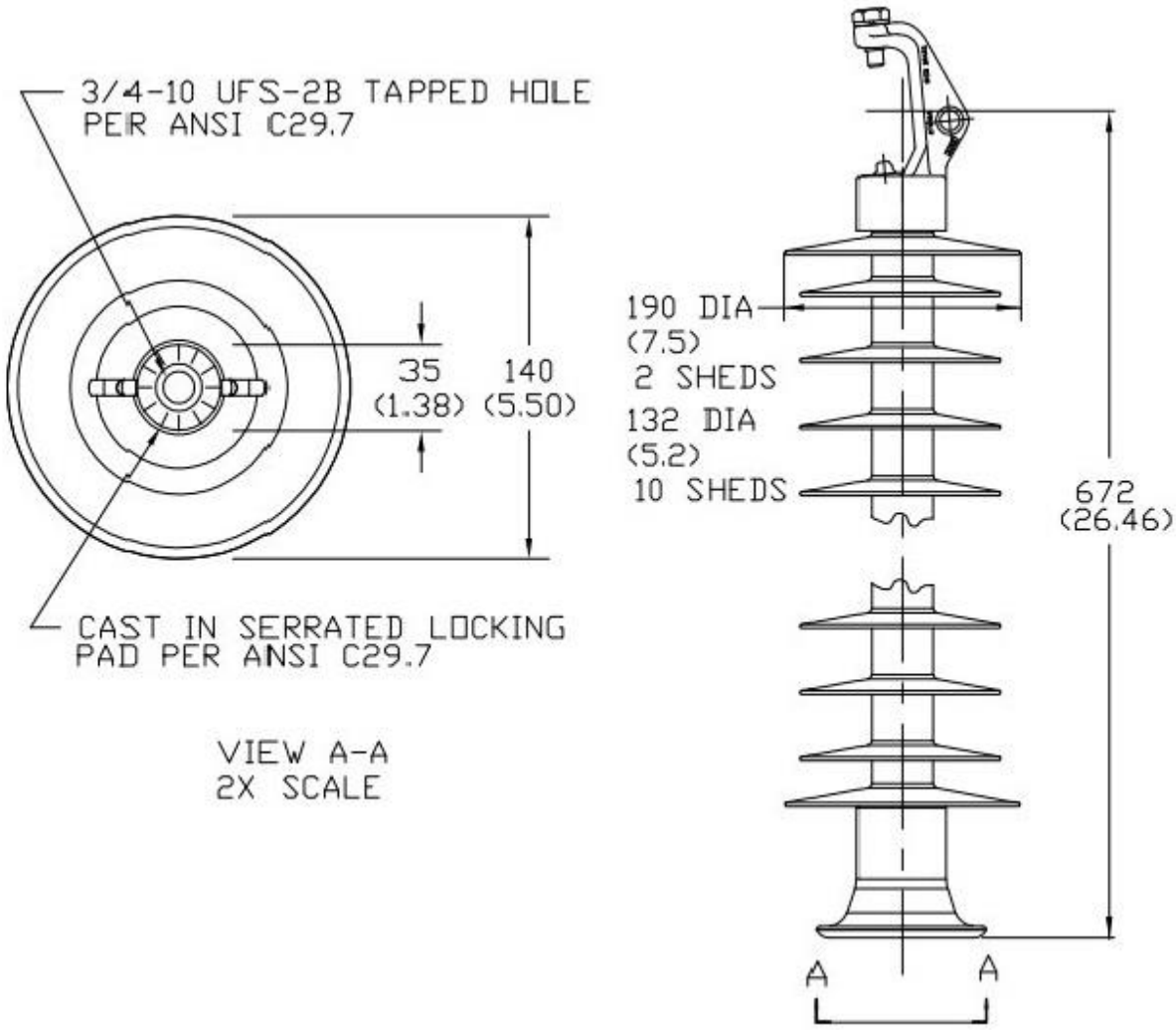

General

Application	Horizontal Line Post
Cantilever Bending Strength - Max.	2500 Lbs (11.1 kN)
Cantilever Bending Strength - Routine	1235 Lbs. (5.5 kN)
Fitting - Ground/Base	5/8" Stud Base
Fitting - Live Line End	Horizontal Clamptop
Material	Silicone
Shed	Polymer
Tension Range	2500 lb

Dimensions

Angle	0
Diameter - Shed(s)	7.5" (190mm) / 5.2" (132mm)
Length - Effective	31 in
Rod Diameter	5/8 in
Thickness - Housing	0.15" (3.8mm)

Electrical Ratings

Arc Distance - Dry	22.2" (818mm)
Creep and Leakage Distance	82" (2083mm)
Critical Impulse Flashover (CIFO) - Positive	510 kV
Flashover Voltage - 60 Hz Dry	330 kV
Flashover Voltage - 60 Hz Wet	180 kV
Voltage - Line	110000 V
Voltage Rating	110 kV
Withstand Voltage - Lightning Impulse (Positive)	510 kV

4.7 INSUL08: Line Post Insulator (110kV), Horizontal

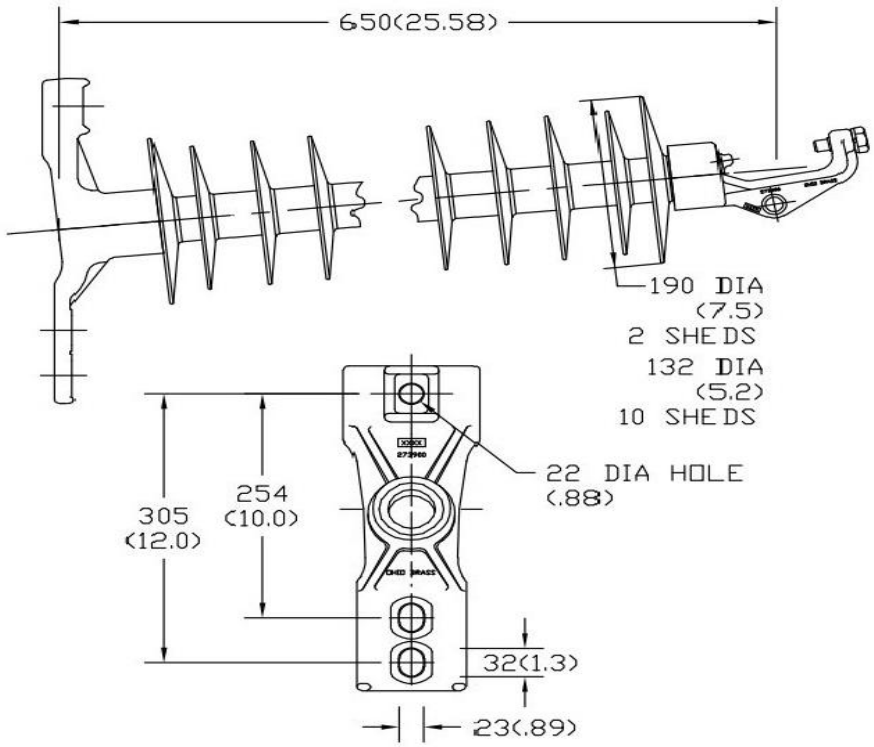

General

Application	Horizontal Line Post
Cantilever Bending Strength - Max.	2500 Lbs (11.1 kN)
Cantilever Bending Strength - Routine	1235 Lbs. (5.5 kN)
Fitting - Ground/Base	Gain Base Horizontal
Fitting - Live Line End	ClamptopSilicone
Material	Galvanized Steel
Material - End Fitting	2500 lb
Tension Range	

Dimensions

Angle	6
Diameter - Shed(s)	7.5" (190mm) / 5.2" (132mm)
Length - Effective	31 in
Rod Diameter	5/8 in
Thickness - Housing	0.15" (3.8mm)
Weight	21.0 lb

Electrical Ratings

Arc Distance - Dry	22.2" (566mm)
Creep and Leakage Distance	82" (1478mm)
Critical Impulse Flashover (CIFO) - Positive	510 kV
Flashover Voltage - 60 Hz Dry	330 kV
Flashover Voltage - 60 Hz Wet	180 kV
Voltage - Line	110000 V
Voltage Rating	110 kV
Withstand Voltage - Lightning Impulse (Positive)	510 kV

5.8 : INSUL09: Polymer Insulator (110kV) - ANSI Ball & ANSI Socket

- Must meet ANSI DS-35 and IEC 61109 standards.

Electrical Ratings

Arc Distance - Dry	30.2 inches (767mm)77
Creep and Leakage Distance	inches (1956mm)
Critical Impulse Flashover (CIFO) – Positive	525 kV
Flashover Voltage - 60 Hz Dry	315 kV
Flashover Voltage - 60 Hz Wet	305 kV
Voltage Rating	110 kV

Dimension

Leakage Distance	77 inch (1956mm)
Dry Arcing Distance	30.2 inch (767mm)

<u>Mechanical Values</u>

Specified Mechanical Load	**160 kN**
Routine Test load	**80 kN**

5.9: INSUL11: Suspension Insulator (110kV) Ball & Y-Clevis

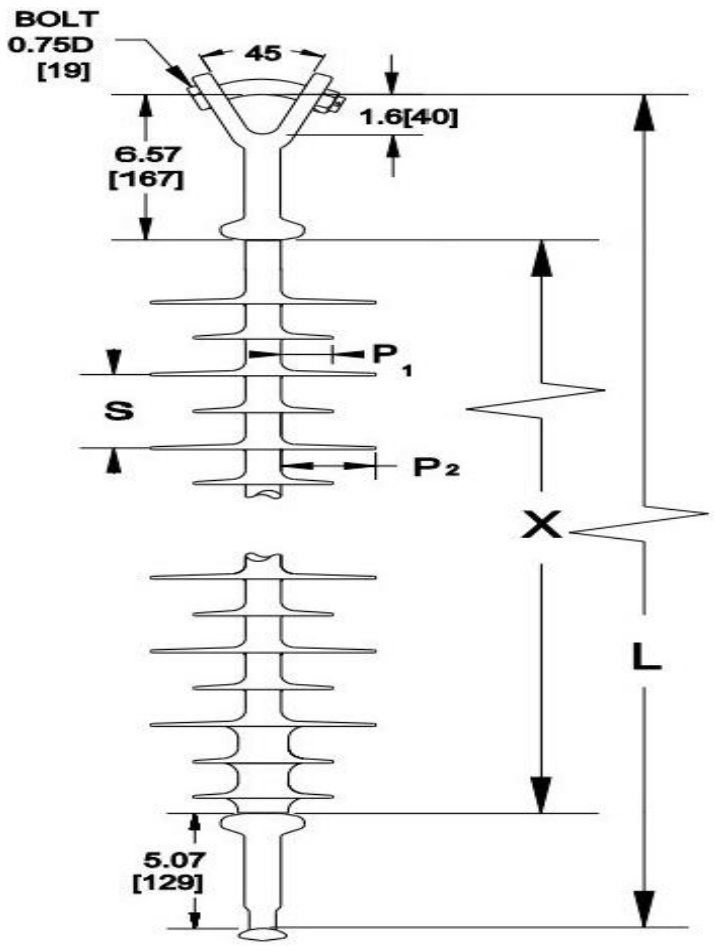

End Fittings

Tower End Fitting: Y-Clevis (Forged Steel)

Line End Fitting: Ball (Forged Steel) (ANSI 52-5)

Material

Material – End Fitting: Steel

Number of Sheds: 9 large 10 Standard

Road Diameter: 7/8ins (22mm)

Electrical

Dry Arc Distance

30.7inch (780mm)

Leakage Distance	77 inch (1956mm)
Flashover Voltage - 60 Hz Dry	320 kV
Flashover Voltage - 60 Hz Wet	305 kV
Voltage Rating	110 kV

5.10 INSUL12: WIREHOLDER, LARGE 3 1/8" X 2 1/2"

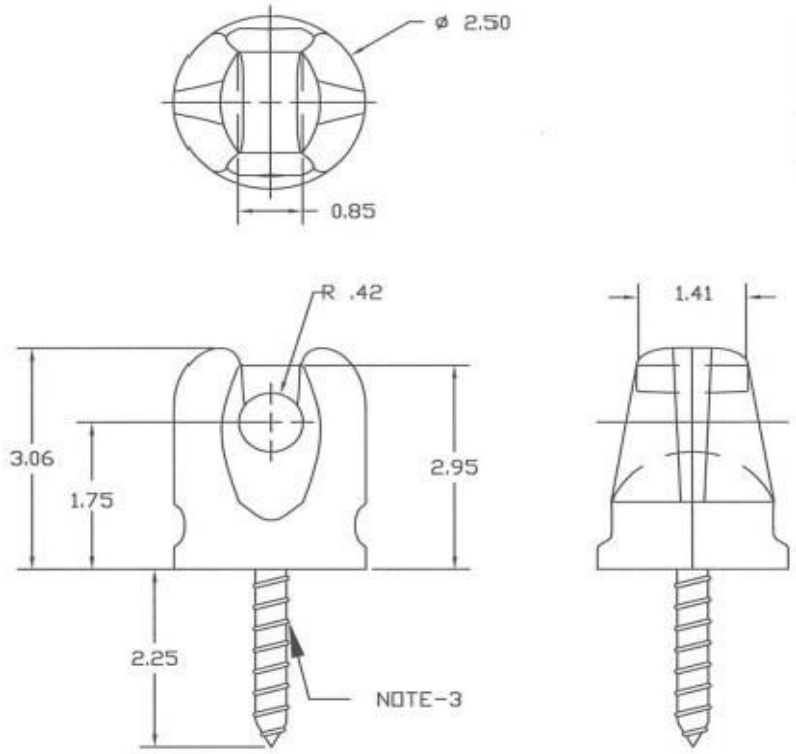

General

Material Porcelain/Steel

6.0 Submission

6.1 Drawings showing the critical dimensions of the insulators offered shall be submitted with the tender

6.2 Type Test copies for all types of insulators shall be submitted with the tender, and shall include, the results of the following tests:

a. Dry flashover test
b. Wet flashover test
c. Impulse frequency test
d. Temperature cycle test
e. Mechanical strength test

f. Electro-mechanical test (Suspension insulators only)

g. High Voltage Test (Pin insulators)

h. Proof Load Test

i. Corrosion Test

6.3 The bidder shall furnish catalogues, literature, operation, and detailed dimensional drawings of complete bid for ease of evaluation**. Additionally, if a bidder has similar features or dimension as that mention within this specification, he/she is required to mention all literature, detail dimensional drawing and materials composition**. This option will allowthe technical evaluators to ascertain its capabilities and comment on its operation.

6.4 Manufacturer recommended insulator washing procedures, shall be submitted with the tender.

7.0 Quality Assurance

The manufacturer shall be certified in accordance with ISO 9001. The supplier must provide a copy of a valid certificate along with his quote. Relevant manuals shall be presented upon request.

8.0 Markings

Markings shall be provided, in English, on the insulator in accordance with ANSI/IEEEStandards, showing at minimum the following information:

a. Manufacturer's name or trade mark

b. Rated voltage;

c. Insulator Material

9.0 Guarantee

Vendor shall guarantee all fuses and fuse link against defects arising out of faulty design, workmanship, or defective material for a period of one (1) year from the date of installation ortwo (2) years from the date of delivery, unless and otherwise specified in tender documents.

Technical Specification for Fuse

1.0 Glossary

Fuse Links *A replaceable fuse element used in a fused cutout*

GPL *Guyana Power and Light Incorporated*

2.0 Scope

This specification sets out the technical requirements for 15kV current-limiting fuse links suitable for use on overhead electricity distribution systems in a totally exposed environment. The fuses will primarily be used for the protection of distribution transformers, laterals, and sub-laterals.

3.0 Standards

The fuse-links and fuse-end fittings must or exceed all applicable requirements f the following standards:

- IEEE STD C37.41-2016: IEEE Standard Design Tests for High Voltage (>1000V)Fuses and Accessories
- IEEE ANSI C37.42: Specification for High-Voltage (Greater than 1000V) Expulsion-Type Distribution-Class Fuses, Fuse and Disconnecting Cutouts, Fuse Disconnecting Switches, and Fuse Links, and Accessories Used with These Devices.
- ANSI 37.43: Specification

4.0 Environmental Conditions

The fuses and fuse links to be supplied against this specification shall be suitable forsatisfactory continuous operation under the following tropical coastal conditions.

a. Maximum altitude above mean sea level less than 1,000 m;
b. Maximum ambient air temperature 40^0C;
c. Maximum daily average ambient air temperature 30^0C;
d. Minimum ambient temperature 5^0C;

e. Maximum relative humidity 100%; and

5.0 Drawings

The diagrams below stipulate the parts of the current-limiting fuse links.

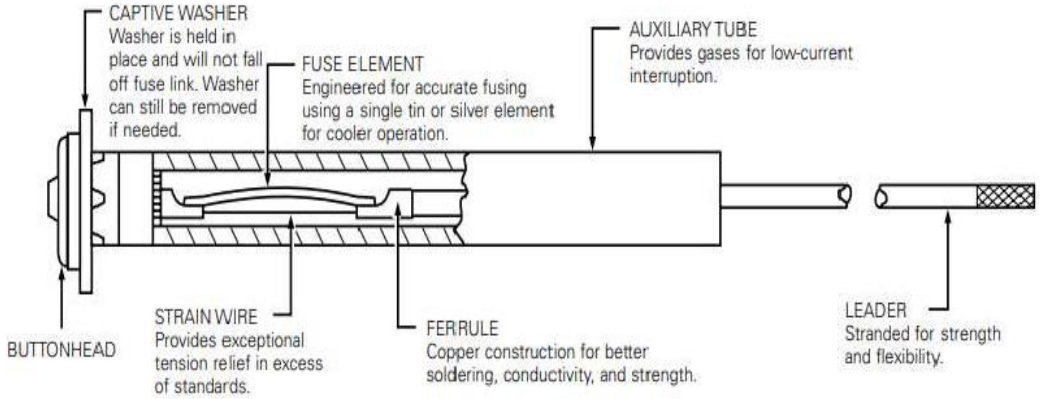

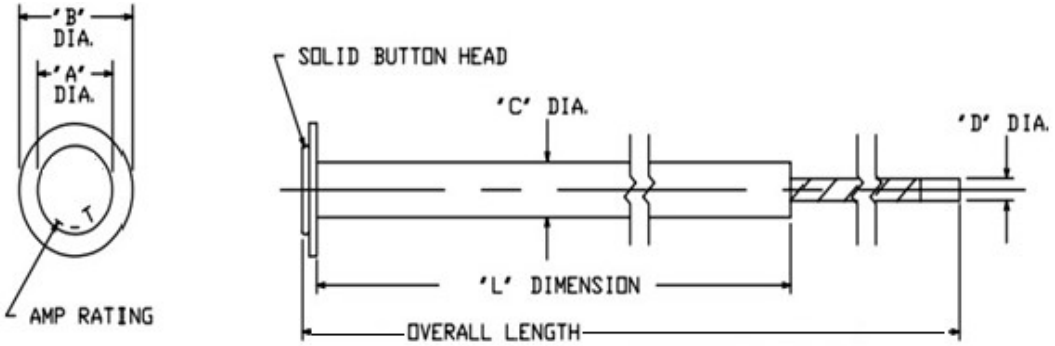

6.0 Ratings

6.1 The fuse links shall be capable of withstanding 125% of the transformer rated full loadcurrent continuously and periodic over-loads up to 150% of the transformer rated full load current.

6.2 The table below shows the Electrical ratings of fuse links of Types T, K, QH and MS,used in GPL.

a. Type T: Slow
b. Type K: Fast
c. Type QH: Medium
d. Type MS: Very Slow

Item #	Fuse Head Style	Fuse link type	Required Cutout Fuse holder	Type	Length (Fuse Links) (L)	Electrical Rating
FL01	Solid	Type T (ANSI)	200 Amp (Must not use in a 100-amp fuse holder.)	Fuselinks	26" (660 mm)	140
FL02			100 Amp (Must not use in a 200-amp fuse-holder.)			80
FL10						8
FL11			200 Amp (Must not use in a 100-amp fuse holder.)			200
FL12			100 Amp (Must not use in a 200-amp fuse-holder.)			15
FL13						50
FL14						20
FL15		Type K (ANSI)				15
FL16		Type T (ANSI)				3
FL17		Type K (ANSI)				45
FL18		Type T (ANSI)				30
FL19						40
FL20						65
FL21		Type K (ANSI)				75
FL22						10
FL23						100
FL24			200 Amp (Must not use in a 100-amp fuse holder.)			140
FL25			100 Amp (Must not use in a 200-amp fuse holder.)			15
FL26						20
FL27			200 Amp (Must not use in a 100-amp fuse holder.)			200
FL28			100 Amp (Must not use in a 200-amp fuse holder.)			25
FL29						3
FL30						40
FL31						50
FL32						6
FL33						65
FL34						2
FL35						30

Item #	Fuse Head Style	Fuse link type	Required Cutout Fuse holder	Type	Length (Fuse Links) (L)	Electrical Rating
FL36	Solid	Type K (ANSI)	100 Amp (Must not use in a 200-amp fuse holder.)	Fuselinks	26" (660 mm)	1
FL37						12
FL38			200 Amp (Must not use in a 100-amp fuse holder.)			150
FL39						125
FL40		Type T (ANSI)	100 Amp (Must not use in a 200-amp fuseholder.)			2
FL41						10
FL42			200 Amp (Must not use in a 100-amp fuse holder.)			150
FL43			100 Amp (Must not use in a 200-amp fuseholder.)			75
FL44						6
FL45						1
FL47						60
FL49						5
FL50		Type K (ANSI)				8
FL51		Type QH (ANSI)				85
FL52		Type K (ANSI)	200 Amp (Must not use in a 100-amp fuse holder.)			120
FL53			100 Amp (Must not use in a 200-amp fuseholder.)			5
FL56		Type T (ANSI)				25
FL57		Type K (ANSI)				60
FL58						80
FL59		Type T (ANSI)				100
FL62	Removable Head	Type MS (ANSI)	200 Amp (Must not use in a 100-amp fuse holder.)			150
FL63						125
FL64	Solid	Type QH (ANSI)	100 Amp (Must not use in a 200-amp fuseholder.)			75
FL65		Type K (ANSI)				85

7.0 Construction

7.1 The top attachment shall be designed to latch into the upper contact assembly of the fuseholder unit and unlatch on operation of the fuse.

7.2 The bottom attachment shall be provided with an actuator which causes fuse-link assembly to drop downward when the striker is released during the operation of the fuselink. The fuse shall pivot on the base hinge and shall not hit the pole during opening

7.3 All current carrying parts shall be of high electrical conductivity and corrosion resistantmetal. The contact parts shall be electrolytically bright tin plated (or silver plated) to ensure long term durability of the contact surfaces.

7.4 All nuts, bolts and washers shall be stainless steel in accordance with AS2837. The boltsand washers shall be grade 316 and to avoid binding, the nuts should be grade 304.

7.5 When the fuse link is intact and correctly assembled it shall latch securely when closed and shall not be dislodged from the fuse contacts by vibration or wind pressure. The carrier shall not dislodge from the bottom hinge in the opening operation, or in the openposition during wind or vibration conditions.

8.0 Submission

8.1 Drawings showing the critical dimensions of the fuse link assemblies offered shall besubmitted with the tender

8.2 The current-time characteristics of the fuse-links offered shall be submitted with thetender

8.3 Type Test copies for all types of fuse links shall be submitted with the tender, ans shallinclude, but not limited to, the results of the following tests:

a. Dielectric test;
b. Temperature rise test;
c. Breaking capacity test.

8.4 The bidder shall furnish catalogues, literature, operation, and detailed dimensional drawings of complete bid for ease of evaluation. Additionally, if a bidder has similar features or dimension as that mention within this specification, he/she is required to mention all literature, detail dimensional drawing and materials composition. This optionwill allow the technical evaluators to ascertain its capabilities and comment on its operation.

9.0 Quality Assurance

The manufacturer shall be certified in accordance with ISO 9001. The supplier must providea copy of a valid certificate along with his quote. Relevant manuals shall be presented upon request.

10.0 Markings

Markings shall be provided, in English, on the fuse-links in accordance with ANSI/IEEEStandards, showing at minimum the following information:

a. Manufacturer's name or trade mark
b. Rated voltage;
c. Rated continuous current
d. Type of fuse link
e. Rated maximum breaking capacity

11.0 Guarantee

Vendor shall guarantee all fuses and fuse link against defects arising out of faulty design, workmanship, or defective material for a period of one (1) year from the date of installationor two (2) years from the date of delivery, unless and otherwise specified in tender documents.

12.0 List of Fuses and Fuse Links Used by GPL

The table below links the item numbers shown in clause 6.2, to the item descriptions.

Item #	Materials
FL01	FUSE LINK, 140 AMP - T
FL02	FUSE LINK, 80 AMP - T
FL03	FUSE, LV Class J - 200A
FL04	FUSE, LV Class J - 315A
FL05	FUSE, LV Class J-100A
FL06	FUSE, LV Class J-125A
FL07	FUSE, LV Class J - 250A
FL08	FUSE, LV Class J - 160A
FL09	FUSE, LV Class J - 400A
FL10	FUSE LINK, 8 AMPS -T
FL11	FUSE LINK , 200 AMP - T
FL12	FUSE LINK , 15 AMPS - T
FL13	FUSE LINK , 50 AMP - T
FL14	FUSELINK , 20AMP - T
FL15	FUSELINK, 15AMPS - K
FL16	FUSE LINK, 3 AMPS -T
FL17	FUSE LINK, 45 AMP - K
FL18	FUSELINK, 30 AMP -T
FL19	FUSE LINK, 40 AMP - T
FL20	FUSE LINK, 65 AMP - T
FL21	FUSE LINK , 75 AMP - K
FL22	FUSE LINK, 10 AMP - K
FL23	FUSE LINK, 100 AMP - K
FL24	FUSE LINK,140 AMP - K
FL25	FUSE LINK, 15 AMP - K
FL26	FUSE LINK, 20 AMP -K
FL27	FUSE LINK, 200 AMP - K
FL28	FUSE LINK, 25 AMP - K
FL29	FUSE LINK, 3 AMP - K
FL30	FUSE LINK, 40 AMP - K
FL31	FUSE LINK, 50AMP - K
FL32	FUSE LINK, 6 AMP -K
FL33	FUSE LINK, 65 AMP - K
FL34	FUSE LINK, 2 AMP- K
FL35	FUSE LINK, 30 AMP - K
FL36	FUSE LINK, 1 AMP- K
FL37	FUSE LINK, 12 AMPS -K
FL38	FUSE LINK, 150 AMP - K
FL39	FUSE LINK, 125 AMP - K

FL40	FUSE LINK, 2 AMPS - T
FL41	FUSE LINK,10 AMPS -T
FL42	FUSE LINKS ,150 AMP - T
FL43	FUSE LINKS, 75 AMP -T
FL44	FUSE LINK, 6 AMPS -T
FL45	FUSE LINK, 1 AMP - T
FL46	FUSE, LV Class J - 180A
FL47	FUSE LINK, 60 AMPS- T
FL48	FUSE, LV Class J-80A
FL49	FUSE LINK , 5AMPS - T
FL50	FUSE LINK , 8 AMPS - K
FL51	FUSE LINK 85AMP - H
FL52	FUSE LINK, 120 AMP - K
FL53	FUSE LINK, 5 AMPS - K
FL54	FUSE LINK, CARTRIDGE 415V - 30 AMPS
FL55	FUSE LINK, CARTRIDGE 415V - 60 AMPS
FL56	FUSE LINK, HT 25 AMP -T
FL57	FUSE LINK, 60 AMP - K
FL58	FUSE LINK, 80 AMP- K
FL59	FUSE LINK, 100 AMP - T
FL60	FUSE (415 A FOR LV C/ OUT)
FL61	FUSE (450 A FOR L.V C/OUT)
FL62	FUSE LINKS ,150 AMP - MS
FL63	FUSE LINKS ,125 AMP - MS
FL64	FUSE LINKS, 75 AMP -H
FL65	FUSE LINK 85AMP - K

13.0 Technical Data Schedule

Item No. _____

No.	Description	GPL's Specified Values (*)	Bidders' proposed Values (**)
1	Reference Manufacturing Standard	IEC 60282-2	
2	System Operating Voltage	13.8kV	
3	Maximum Design Voltage	15 kV	
4	Rated Maximum Breaking Capacity at Rated Voltage (Symmetrical)	8 kA	
5	Melting Current and Time, (Ampere/second)	*	
6	Minimum Tensile Withstand Strength	4.5kg	
7	Speed Ratio, 6 - 8.1	*	
8	Fusing Element Material	*	
9	Diameter of Removable Washer	*	
10	Diameter of Removable Head	*	
11	Diameter of Flexible Tail	*	
12	Length of Fuse-Link	660mm	
13	Time-Current Characteristics	*	
14	Product is Type tested	Yes	
15	Manufacturer	*	
16	Country of origin	*	

(*) – Values to be provided/proposed by the Vendor (**) –

Please provide explanation for deviations, if any

Technical Specification for Cutout and Switches

1.0 Scope

This specification describes the minimum technical requirements for design, engineering, manufacturing, testing, inspection, delivery and performance requirement for cutout switchesfor 13.8kV, intended to be used in the overhead distribution system in Guyana.

2.0 Applicable Code & Standards

The latest revision of the following codes and standards shall be applicable for the equipment/materials covered in this specification. In case of any deviation, the vendor/manufacturer may propose equipment/material conforming to an alternate code or standard. However, the provision of SEC standards shall supersede the provisions of these alternate standards in case of any difference.

- IEC 6060 High Voltage Test Techniques.
- IEC 60129 Alternating Current Disconnects and Earthing Switches.
- IEC 60168 Test on Indoor and Outdoor Post Insulators of Ceramic Material or Glass for System with Nominal Voltages Greater Than 1000 V.
- IEC 60437 Radio Interference Test on High Voltage Insulators.
- IEC 60507 Artificial Pollution Test on High Voltage Insulators to be used on A.CSystem.
- ANSI C 37.41 Design Tests for High Voltages Fuses, Distribution including AirSwitches, Fuse Disconnecting Switches and Accessories.
- ANSI C 37.42 Specification for Distribution Cut Outs And Fuse Links.
- BS 729 Galvanizing

In case of any deviation from the listed standards, it should be indicated in the list of deviations submitted by the supplier.

3.0 Service Conditions

The Cutout Switches shall be suitable for continuous, satisfactory operation under climatic conditions listed below: -

- Maximum altitude above mean sea level less than 1,000 m;
- Maximum ambient air temperature 40^0C;
- Maximum daily average ambient air temperature 30^0C;
- Minimum ambient temperature15^0C; and
- Maximum relative humidity 100%.

The Cut Out Switches shall be designed and protected for use in exposed, heavily polluted,and salty, corrosive, and humid tropical coastal atmospheric conditions.

4.0 System Parameters: -

The systems on which the isolators will be installed will be:

- Nominal System Voltage, kV 13.8 kV
- Highest System Voltage, kV 15 kV
- Nominal Frequency (±5%) 60Hz

5.0 Technical Specification

The Cutout Switches should have the technical particulars as detailed below

- Rated Nominal Voltage 13.8 kV
- Radio interference voltage 250µV at 1MHz
- Fuse link:
    - The drop out fuse cutouts shall be suitable in all respects for fuse links withinthe range as defined in IEC 60282-2 and NEMA SG 2. It should be K-Type with removable button head and with the length of 23" (584.2mm)
- Rated Nominal Current 100A and 200A.
- Continuous & Load break Current 100A and 200A
- Interrupt Capacity Amps (minimum) 10kA
- Basic Insulation level 95 kV
- Interchangeability:

- The fuse holder and tube of the dropout fuse cutout shall be dimensionally compatible with a universal type IEC and NEMA fuse links of corresponding rating. The cutout and fuse links shall meet the interchangeability requirementof ANSI C 37.42 as also contained in NEMA SG 2.

- Fuse tube:
  - Fuse tube shall be bone fiber lined epoxy fiberglass with exterior ultra violet (U.V) protected, solid cap and single vented with arc shortening rod. Solid link shall also be used in place of as and when required.
- Creepage Distance
  - 660 mm creepage distance with single insulator
- Main Assembly construction
  - The main assembly shall be mounted on a single insulator of 660 mm creepage distance in the case of 13.8 kV fuse cutouts
- Mounting Arrangement:
  - The dropout fuse cutouts shall be suitable for vertical mounting. NEMA brackets shall be provided for both type of dropout fuse cutouts. The brackets including bolts, nuts, lock washers etc. shall be in accordance with ANSI C

    37.42 to prevent swiveling. The upper, lower fuse unit and fitting shall be reusable. The fuse holder shall be easy to operate with hot stick.
- Contacts:
  - All contacts shall be designed to give continuous rated current carrying capacity after exposure to marine and desert climates for the service life. Contacts shall be silver clad on each side. Embossed surfaces with wiping action are preferred. Top and bottom contacts, sub-assemblies and mounting fitting shall be potted into the polymeric insulators. The upper fixed contacts assembly shall not be corroded when exposed to atmosphere. Upper contacts shall positively latch in the closed position. The lower contacts shall be with stainless steel backup springs to prevent arcing that may occur as the fuse tube rises slightly in the hinge during operation
- Terminals:
  - The terminals shall be made in such a way that ACSR/AW conductors can be connected without any risk of corrosion. The material used shall be copper and plated with suitable alloy. The terminals shall be of parallel groove type and

shall be suitable for the standard sizes of conductors used by Guyana Power & Light.

- Insulators:
    - The insulators shall be **polymer** with grey color single-piece housing and sheds that are designed to minimize trapping of contamination of dust, sands, etc. Housing shall be made of UV-resistant high-temperature vulcanized silicon rubber with hydrophobic surface. There shall be no steel bands around the insulator. In case of standoff insulator, the insulators shall be rigidly connected to the channel, base where provided so that deflection of the insulators under short circuit conditions is kept to a minimum and there is no tendency for them to work loose from base.
- Load break hook:
    - The dropout fuse cutouts shall be provided with load break hooks to facilitate the use of portable load break tools. The attachment hooks shall be made of galvanized steel, not less than 9.54 mm (3/8" in) diameter. They shall be resistance welded to the upper contacts assembly. Spot welding, which can produce localized rust and weaken the hooks, shall not be acceptable.
- Galvanizing:
    - All iron components shall be galvanized. The supplier /vendor shall state weight / thickness of zinc coating on the attached technical data schedule.
- Fuse tube assembly:
    - The assembly shall be designed in such a way that the fuse tube can be pushed-in into the slot even without taking due care even when the closing force is applied from angle.
    - The angle of the fuse tube relative to the vertical shall be given on the attached data schedule.
    - The toggle mechanism shall provide locking action to protect the fuse link from shock. A spring-assisted flipper shall assist arc interruption by the withdrawal of the fuse tail.
    - The fuse tube cap shall preferably be of the non-expandable type.
    - A lifting eye shall be provided on the fuse tube and designed for use with a hot stick

6.0 Surge Arrester

Surge Arrestor attached to the combination type cutout switches under this specification mustfollow

TECHNICAL SPECIFICATION – SURGE ARRESTERS.

7.0 Markings

Each fuse tube shall be permanently marked with the following information as minimum, inEnglish.

- Rated voltage.
- Maximum continuous current rating.
- Rated interrupting current symmetrical.
- Basic insulation level.
- Manufacturers' name or trademark.
- Year of manufacture.
- Country of origin.

8.0 Packing & Shipment

Each cutout switch (L.B.S) shall be packed individually in a strong non-returnable box insuch manner to prevent damage to components during transportation and handling up to installation site. Packing shall be designed to prevent entry of dust, ingress of moisture and other foreign materials.

Packing shall be marked with the following:

- Manufacture's name
- Country of origin.
- Handling instruction.
- Voltage and current rating.

9.0 Guarantee

The vendor shall guarantee the cutout switches against all the defects arising out of faulty design, workmanship, or defective material for a period of **one (1) year** from the date of installation or two (2) years from the date of delivery, unless and otherwise specified in tender documents.

If no exception/deviations are taken to this specification and no list deviations is submitted, it shall be deemed that, in every respect, the offered cutout switches (L.B.S) and their accessories conform to this specification.

A reference list of the present users of the offered cutout switch with the relevant address and telephone number shall be included.

10.0 Drawings

The bidder shall furnish catalogues, literature, operation and detailed dimensional drawingsof complete cutout switch.

14.0 Quality Assurance

The manufacturer shall be certified in accordance with ISO 9001. The supplier must providea copy of a valid certificate along with his quote. Relevant manuals shall be presented upon request.

15.0 Technical Data Schedule

13.8kV Dropout Fuse Cutout

Item No._____

S/N	Description	Unit	GPL Specified Values	Bidders' Proposed Values
1	System Voltage	kV	13.8	
2	Max design voltage	kV	15	
3	Continuous current capacity	A	100 or 200 *	
4	Interrupting current (symmetrical)	kA	10	
5	BIL	kV	95	
6	Total minimum creepage distance	mm	660 *	
7	Max radio interference voltage	µV	250	
8	Ambient temperature during temperature rise test	°C		
9	Temperature rise of Contacts	°C		
10	Temperature rise of terminals	°C		
11	Material of support insulators	-	Polymer	
12	Color f insulators	-	Grey colour	
13	Manufacturer of Insulator	-		
14	Type of Main contacts material		Copper	
15	Fuse cutout with single of standoff insulator NEMA Brackets	-	Required	
16	Cutout suitable for removable button head fuse links	Yes/ No		
17	All assemblies potted into the porcelain.		Required	
18	Shed to be incorporated into upper contact assembly.		Required.	
19	All current carrying parts of copper or copper alloy.		Required.	
20	Conductors terminals tin plated		Required.	
21	Contacts silver clad		Required.	
22	All ferrous components galvanized		Required.	
23	Load break hooks fitting.		Required.	

2	Arc interruption assisted by a spring operated flipper		Required.	

4				
25	The protection of fuse link from mechanical shock by latching of toggle mechanism		Required.	
26	Non expendable type fuse cap		Required.	
27	The fuse tube marked with manufacturer, model continuous and interrupting current rating,, rated voltage and date of manufacture.		Required.	
28	Type test certificates included in the tender along with complete descriptive literature.		Required.	

*To be specified in the tender document.

Technical Specifications for Distribution Arrestors

1.0 Scope

This specification covers the design, manufacture, testing, supply and performance requirements for gapless metal oxide, polymeric housed distribution type surge arresters foroutdoor use.

2.0 Definition

2.1 Surge Arrester

A device designed to protect electrical apparatus from high transient over voltages.

2.2 Gapless Metal-Oxide Surge Arrestor

A surge arrester having one or several non-linear metal-oxide resistors with highly non-linear voltage-current characteristics, connected in series, but having no integrated series or parallel spark gaps.

2.3 Polymeric housed Surge Arrestor

A surge arrester with a housing made of polymeric material without air voids neither betweenthe housing and the metal-oxide resistors nor the housing itself. Arresters must have directly moulded housings. Arresters manufactured by slip-on, pre molded housing will not be accepted in view of the weak interface between the housing and the assembled disc.

2.4 Bonding between Housing and Metal-oxide Resistors/ Interfacial sealing The adhesion between the polymeric housing and the metal-oxide resistors or any other metallic or non-metallic parts inside the housing must be strong enough, homogeneous, robust, and resistant to thermal cycles and environmental stresses.

3.0 Service Conditions

The Surge Arresters and accessories shall be suitable for continuous, satisfactory operationunder climatic conditions listed below: -

- Maximum altitude above mean sea level less than 1,000 m;
- Maximum ambient air temperature 40^0C;
- Maximum daily average ambient air temperature 30^0C;
- Minimum ambient temperature15^0C; and
- Maximum relative humidity 100%.

4.0 System Parameters

The arrester must be able to operate under the system parameters mentioned in thisspecification.

Nominal System voltage, Frequency	13.8 kV, 60 Hz.
Grounding of Neutral	Three Wire Impedance Grounded
Temporary Overvoltage (Earth Fault Factor)	12.7 KV for 10 sec.
Number of Phases	3 Phases
Highest System Voltage	15 kV
Insulation Withstand Level (BIL)	95 kV
Max. Voltage Regulation	5%
Max. System Line to Ground Voltage	8.38kV

5.0 Technical Specification

The Surge Arresters shall conform to the technical requirements given below:

5.1 Polymeric Housing Material

The polymer material which is used for the arrester housing must be tracking and erosion resistant, stabilized against UV radiation and have proven records of at least 15 years in similar applications.

5.2 Housing and Mechanical Requirements

The arrester shall meet the following specifications:

- Creepage Length 640mm (min.)
- Pull Strength 1000 N (min)
- Cantilever Load 75 Nm (min)

5.3 Electrical Requirements

The arrester shall meet the following specifications based on IEC 60099-4:

- Arrester Max. Cont. Operating Voltage Uc 12.7 KV rms
- Long Duration Discharge Class 75A, 1000µs
- Lightning Impulse 1,2/50µs
- Withstand Voltage 86.6 KVp
- Wet Power Frequency Withstand Voltage 49.4 KV rms
- Maximum Switching Surge Protective Level 35.7 kV @ 500A
- Discharge Current 5kA or 10kA

6.0 Accessories

The mounting accessories shall be designed to match all mechanical and electricalrequirements specified for the arrester.

6.1 Mounting

Arresters shall be suitable for vertical and horizontal mounting.

6.2 Terminals

The line and ground terminals of the arrester shall be 3/8-16 or M12 threads. All external metal

parts (excluding the mounting bracket and associated hardware) will be stainless steel.However, it is permitted that the hex nuts on the line and ground end may be brass.

6.3 Disconnectors

The earth end shall get connected to the earth terminal of the arrester through disconnector. The function of the disconnector is that in the event of, operation of surge arrester, the currentshall pass to earth and the disconnector shall disconnect (isolate) the earth terminal and it shall remain suspended on the mounting of the arrester. There by it will be disconnected fromthe earth and shall provide visual indication to the patrolling personnel. The line can be recharged without isolating the damaged arrester.

7.0 Corrosion Protection

The arrester and all its accessories shall be adequately protected against corrosion. All exposed ferrous components, unless of stainless steel or other non-corrosive metal, shall behot dip galvanized. Hardware shall be of stainless steel.

8.0 Tender Sample

ONE tender sample of offered Polymeric surge arrester with disconnector will have to besubmitted along with the offer.

9.0 TESTING

The arresters shall be tested in accordance with the following latest standards

- IEC 60099-4/ 2004-05 Standard

9.1 Location of Tests

Routine tests and acceptance tests shall be carried out at the supplier's factory. Type testsshall be carried out in internationally recognized laboratories.

9.2 Type Test for Arresters with Polymeric Housing.

All the tenderers must submit copies of type test certificates along with laboratory approved drawings for the products offered by them. Surge arresters offered shall be manufactured withthe same configuration & raw materials as used in the surge arrester for which type test reports are submitted.

- Insulation Withstand Test on Arrester Housing
- Residual Voltage Tests

- Long Duration Current Impulse Withstand Test
- Operating Duty Test

- Partial Discharge Voltage Test
- Accelerated ageing test
- Power frequency voltage versus time characteristics
- Short Circuit Test/Mode of Failure Test

10.0 Routine Tests

The manufacturer shall carry out the following routine tests on each single arrester inaccordance with IEC 60099-4/ 2004-05 Standard.

- AC Reference Voltage Test (final arrester)
- Partial Discharge Test (final arrester including hardwares/accessories)
- Residual Voltage Test (final arrester or metal-oxide resistors)

The manufacturer shall provide a routine test report including all relevant details with respectto the test limits. On request, the manufacturer shall also provide a routine test protocol including all measuring results. ***Sample tests are not acceptable.***

11.0 Acceptance Tests

The acceptance tests shall be carried out as per IEC: 60099-4/ 2004-05 standard.

- Power frequency reference voltage test
- Lightning impulse residual voltage test
- Internal partial discharge test
- Visual examination & Dimensional verification

12.0 Marking

Each arrester shall be provided with a nameplate, bearing the following information, as aminimum, in English language:

- Arrester Type
- IEC standard
- Continuous Operating Voltage Uc
- Rate Voltage Ur
- Nominal Discharge Current
- Rated Short Circuit Current

- Manufacturers name or trademark

- Month & Year of manufacture
- Date of supply with period of guarantee

13.0 Drawings

The tenderer shall furnish catalogues, literature, and detailed dimensional drawings of complete arrester with disconnector showing clearances, polymeric housing details & nameplate details.

14.0 Quality Assurance

The manufacturer shall be certified in accordance with ISO 9001. The supplier has to providea copy of a valid certificate along with his quote. Relevant manuals shall be presented upon request.

15.0 Packing and Shipment

Arresters shall be securely packed, complete with all accessories, in strong non-returnableboxes, in such a manner as to prevent damage during shipment.

SCHEDULE 1: GUARANTEED
TECHNICAL PARTICULARS

REQUIREMENTS FOR GAPLESS METAL OXIDE DISTRIBUTION

TYPE ARRESTERS WITH POLYMERIC HOUSING

Table to be filled in by the manufacturer / Definitions according to IEC 60099-4

No.	Description		Offered by Bidders
1	Name of Manufacturer		
2	Arrestor Type or Designation		
3	Arrester Continuous Operating Voltage Uc	kV rms	
4	Arrester Rated Voltage Ur	kV rms	
5	Nominal Discharge Current In	kA	
6	Line Discharge Class		
7	High Current Discharge Current 4/10µs	kA	
8	Long Duration Current Amplitude	A	
9	Long Duration Current Duration	µS	
10	Rated Short Circuit Current Isc		
	a. High Current	kA	
	b. Low Current	A	
11	Pull Strength	N	
12	Cantilever Strength	Nm	
13	Torque strength	Nm	
14	Total Height of Arrester	mm	
15	Creepage Length	mm	
16	Flashover Distance	mm	
17	Lightning Impulse 1.2/50µs Withstand Level	kVp	
18	Wet Power Frequency Withstand level	kV rms	
19	Housing Type		
20	Housing Materials		
21	Colour of Housing		
22	Reference Current	mA	
23	Reference Voltage Range (min/max)	kV	
24	Max. Partial Discharge Level	pc	
25	TOV Curve enclosed?	yes/no	
26	Arrester will be able to operate under the system parameters mentioned in cl.no.4 ?	yes/no	
27	Maximum Residual Voltage of Arrester for:		

	Lightning Current Impulse 8/20 µs at 2.5 kA	kV	
	Lightning Current Impulse 8/20 µs at	kV	

	5 kA		
	Lightning Current Impulse 8/20 µs at 10 kA	kV	
	Steep Lightning Current Impulse 1/10 µs at Nominal Discharge Current In	kV	
28	Minimum recommended Center-to-Center Distance between Arresters	mm	
29	Minimum recommended Distance from Center of Arrester to nearest Grounded Object	mm	
30	Whether earth disconnector, as mentioned in the specification, is provided	yes/no	

1.0 Scope

This specification describes the minimum technical requirements for design, engineering, manufacturing, testing, inspection, delivery and performance requirement for air type Bypass/Disconnect switches and Disconnect switches for 13.8 kV, Automatic Voltage Regulators and Auto reclosers intended to be used in the overhead distribution system.

2.0 Applicable Codes and Standards

The latest revision of the following codes and standards shall be applicable for the equipment/materials covered in this specification. In case of any deviation, the vendor/manufacturer may propose equipment/material conforming to an alternate code orstandard.

- IEC 60060 -1 High Voltage Test Techniques.
- IEC 60129 Alternating Current Disconnector and Earthing Switches.
- IEC 60137 Bushings for alternating voltages above 1 kV
- IEC 60168 Test on Indoor and Outdoor Post Insulators of CeramicMaterial or Glass for System With Nominal Voltages Greater Than 1000 V.
- IEC 60437 Radio Interference Test on High Voltage Insulators.
- IEC 60507 Artificial Pollution Test on High Voltage Insulators to be usedon A.C System.
- IEC 60694:1996 Common Specifications For High Voltage Switchgear andControl gear Standards.
- ANSI C 37.41 Design Tests for High Voltages Fuses, Distribution includingAir Switches, Fuse Disconnecting Switches and Accessories.
- BS 729 Galvanizing

In case of any deviation from the listed standards, it should be indicated in the list ofdeviation submitted by the supplier.

3.0 Service Conditions

The Disconnect/Bypass-Disconnect shall be suitable for continuous, satisfactory operationunder climatic conditions listed below: -

- Maximum altitude above mean sea level less than 1,000 m;

- Maximum ambient air temperature 40^0C;

- Maximum daily average ambient air temperature 30^0C;
- Minimum ambient temperature15^0C; and
- Maximum relative humidity 100%.

The G.A.B shall be designed and protected for use in exposed, heavily polluted, and salty,corrosive, and humid tropical coastal atmospheric conditions.

4.0 System Parameters

The systems on which the isolators will be installed will be:

- Nominal System Voltage, kV 13.8 kV
- Highest System Voltage, kV 15 kV
- Nominal Frequency (±5%) 60Hz
- Solidly earthed

5.0 Design and Construction Requirements

- General

The Bypass/Disconnect switch for voltage regulator shall be capable of switching load current with full recovery system voltage across the switch and interrupting the magnetizing current and overhead line charging current. They shall permit all switching to be done on-load such as bypassing, disconnecting and connecting the line current. Bypass/Disconnect switch for voltage regulator shall be fitted with interrupting devices and shall be capable of closing on faults.

The Bypass/Disconnect switch for autorecloser shall be capable of switching load current with full recovery system voltage across the switch and shall permit all switching to be done live such as bypassing, disconnecting and connecting the full line current and shall be fitted with interrupting device and shall be capable of closingon fault.

Disconnect switch for voltage regulator shall be capable of switching load current with full recovery voltage across the switch and shall permit all switching to be donelive such as disconnecting and connecting

- Current Rating: 600 Amps
- Basic insulation level (BIL): 110kV
- Rated Short Time Withstand Current: The rated r.m.s short time current for onesecond shall be: 21 kA.
- Radio influence:

  The maximum value shall be as follows:

  13.8kV: 250 µV at 1 MHZ
- Creepage distances:

  Creepage distances are based on nominal line-to-line voltage. Creepage/Leakagedistance shall be 25/40 mm/kV minimum.
- Main assembly:
  - Bypass disconnect switch for automatic voltage regulators.
    - Bypass/Disconnect switches shall be single-pole type with built in features of mechanical interlocking, sequencing and synchronizing. It shall be suitable for vertical mounting on a fabricated galvanized steelbase and capable to be operated by hot stick through built in hook.
    - The switch shall be capable to bypass the source current, disconnect the source and load terminals and interrupt the magnetizing current in asequence such as to avoid any damage to the voltage regulator.
    - Arc interrupting devices shall be fitted on the fixed contacts to provideprotection to the main contacts from erosion.
  - Autorecloser bypass/Disconnect switch shall be single pole type, suitable for vertical mounting capable to bypass the source current without damage to the autorecloser.
  - Disconnect switches for voltage regulators shall be of single pole type and suitable for vertical Installation.

- Insulators:

The insulators shall be the solid glazed porcelain, epoxy or polymer type and shall be bird Proof. Color shall be preferably grey. However, brown color shall be acceptable. The insulators shall be rigidly connected to the base so that deflection of the insulators under shortcircuit conditions is kept to a minimum and there is no tendency for them to work loose from base.

- Contacts and blades

All contacts shall be designed to operate on continuous rated current. Silver to silver / nickel to nickel contacts shall be utilized throughout the switch. The contacts shall be capable to prevent weld burn or pit on over currents. The disconnect, interrupter and bypass blades shall have double member hard drawn copper construction clad with extra thick, high density low porosity silver/nickel. The surface of stationary contacts shall be such that to prevent stickinggalling or seizing and shall be resistive to weld, burn or pit on over currents. The bypass blade must be capable to latch positively, to operate at full load when closed after it remains open for a long period and prevent opening under high momentary current conditions it must be capable to retain complete alignment throughout its life time for its disconnecting and bypass components.

- Interrupter

The interrupter blade should be capable for proper arc quenching for interrupting the shuntwinding magnetizing current.

- Connections

The switch terminals for connection of line conductors must not be loose due to vibration.

The terminals shall be suitable for copper, ACSR/AW, Aluminum and aluminum alloyconductors without risk of corrosion.

The terminals shall be designed for use with compression lugs, for fixing the lug and shall besuitable for the G.P.L standard sizes of conductors.

- Galvanizing

All iron components shall be coated with zinc or a material having equivalent protection against atmospheric corrosion. If coated by the hot dip galvanizing method, coating shall bemade in accordance with BS 729.

The supplier shall state weight/thickness of zinc coating on the attached schedule.

6.0 Marking

Each switch shall be provided with a weather proof and corrosion proof name plate and shallgive

the following information in English.

- Purchase order /tender No.
- Manufacturer name.
- Year of manufacturing.
- Type of switch
- Rated current.
- Rated short time withstand current.
- Rated voltage.
- Short circuit current.

7.0 TESTING AND INSPECTION:

- General:

  All switch shall be tested in accordance with the latest standards and as specified herein. The supplier shall provide acceptable type test and routine test certificates forhis offered switches. Guyana Power & Light (G.P.L) at his discretion may wish to have additional or to repeat type test being carried out.

  No switch shall be shipped until approval of the test reports has been given by G.P.L.Routine and /or sample tests shall be carried at the supplier/manufacturer factory.
  Type tests shall be carried out at independent testing laboratory and be witnessed by a representative of an independent testing laboratory.

- Type Test:

  - All load break switches shall be type tested in accordance with the lateststandards in this specification given below.
  - Dielectric tests to IEC 60129 clause 6.1.
  - Power frequency withstand (1 minute dry & wet).
  - Impulse withstand (1.2 x 50 µsec).
  - Temperature rise test to IEC 60129 clause 6.3.
  - Resistance tests to IEC 60129 clause 6.4.
  - Short time withstand current and peak current withstand tests to IEC 60129clause 6.5.
  - Operating and mechanical endurance tests to IEC 60129 clause 6.104

- Test for measuring Radio interference levels to IEC 60437.
- Pollution tests to IEC 60507.

Routine Tests:

All offered switch shall meet the routine test requirements of the standards given below:

- Power frequency voltage withstand test (dry) to IEC60129 clause 7.1.
- Voltage tests on control and auxiliary circuits to IEC 60129 clause 7.2
- Measurement of the resistance of main circuit to IEC 60129 clause 7.3
- Mechanical operating tests to IEC 60129 clause 7.101

- Inspection:

Guyana Power & light may wish to witness tests or visit the factory during manufacture of any or all Items covered by this specification. Accordingly, the supplier shall be give the purchaser adequate notice of manufacturing program and test to be witnessed. G.P.L may require certificates and data from the manufacturer/supplier on all pertinent aspects of the manufacturing process.

8.0 PACKING AND SHIPMENT

- Each switch shall be packed individually in a strong nonreturnable wooden crate in such manner to prevent damage components during transportation and handling up toinstallation site.
- Packing shall be designed to prevent entry of dust, ingress of moisture and otherforeign materials.
- Packing shall be marked with the following:
    - Manufacture's name
    - Country of origin.
    - Guyana Power & Light purchase order number.
    - Weight in kilogram.
    - Handling instruction.
    - Voltage and current rating
- Supplier shall contact material department for additional packing, handling andshipment instructions as applicable.
- Switches shall not be packed in any organic material.

9.0 GUARANTEE

- Vendor shall guarantee the switch against all the defects arising out of faulty design, workmanship or defective material for a period of one (1) year from the date of installation.
- If no exception/deviations are taken to this specification and no list of deviations is submitted, it shall be deemed that, in every respect, the offered G.A.B and their accessories conform to this specification. A reference list of the present users of theoffered load break switch with the relevant address and fax No. shall be included.

10.0 TECHNICAL DATA SCHEDULE

- The vendor shall complete and return one copy of the attached technical data schedulewith quotation. In addition to data schedule, submittal for clauses from 10.2 to 10.4shall be provided with quotations.
- Detailed dimensional drawing of the Load break switch showing mounting arrangements.
- Type test certificates.
    - Submittals required following award of contract are given below.
        - Manufacturing schedule, progress report and test schedule.
    - Test reports

SCHEDULE 1: Technical Data Schedule

Type of Switch: Bypass-Disconnect/ Disconnect Switch for Voltage Regulator, Bypass-Disconnect for AutoRecloser, Hook stick operated switch.

Item No._____

S/N	Description	Unit	G.P.L Specified Values	Bidders' Values
1	System Voltage	kV	13.8	
2	Rated Voltage	kV	15	
3	Continuous current capacity	A	600	
4	Breaking current capacity	A	600	
5	Short time withstand current (1sec)	kA	21	
6	Creepage Distance	mm/kV	25/40	
7	Dry flash over voltage	kV	110	
8	Wet flash over voltage	kV	80	
9	Max radio interference voltage	µV	250	
10	Ambient temperature during temperature rise test	°C		
11	Temperature rise of contacts	°C		
12	Temperature rise of terminal	°C		
13	Material of support insulators and color.	-	Porcelain/ Epoxy/Polymer glazed gray/brown	
14	Bird proof insulators	-	Preferred	
15	Minimum clearance between phases and earth	mm		
16	Method of attachment of insulator to insulator base	-		
17	Minimum clearance between phases and earth	mm		
18	Main contacts material	-		
19	Main contacts plating material	-		
20	All ferrous component galvanized	-	Yes	
21	Short circuit levels	kA	21	
22	Fitting of permanent load break device	-	Required	
23	Fault closing capability	-	Required	

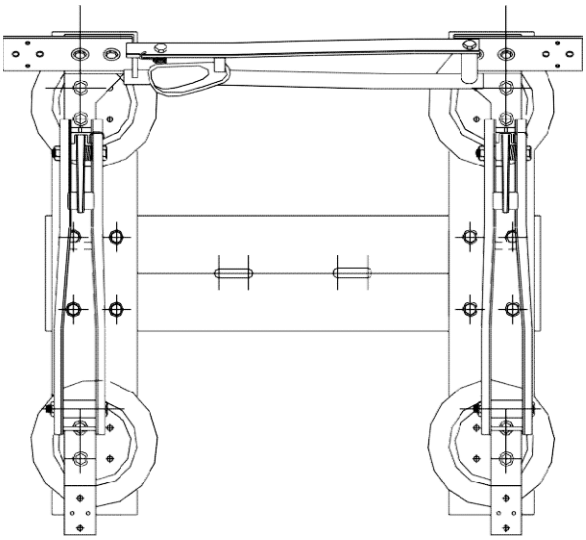

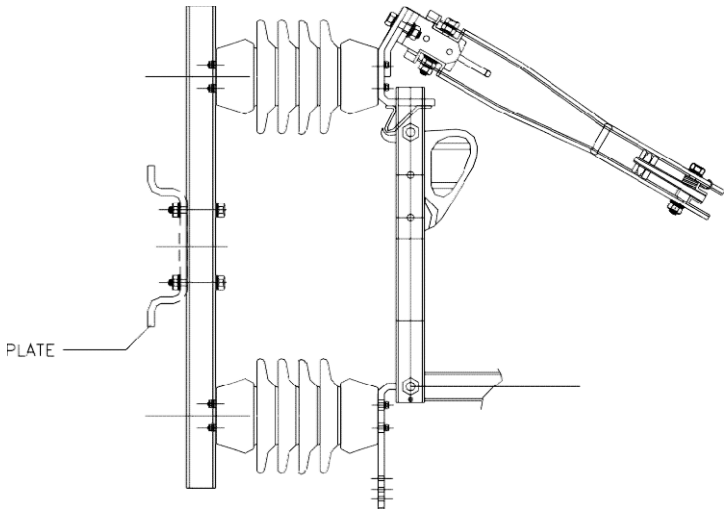

Note:

Drawing above is for conceptual purposes only

Auto Recloser Bypass Switch

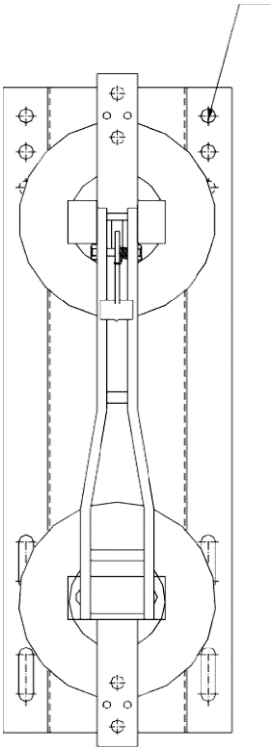

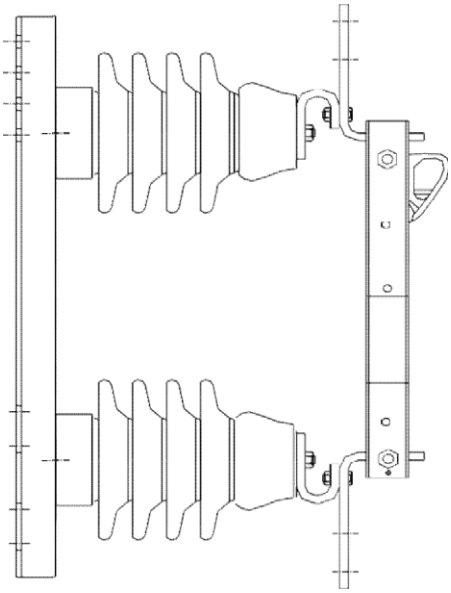

Note:

Drawing above is for conceptual purposes only

Disconnect Switch for Voltage Regulator

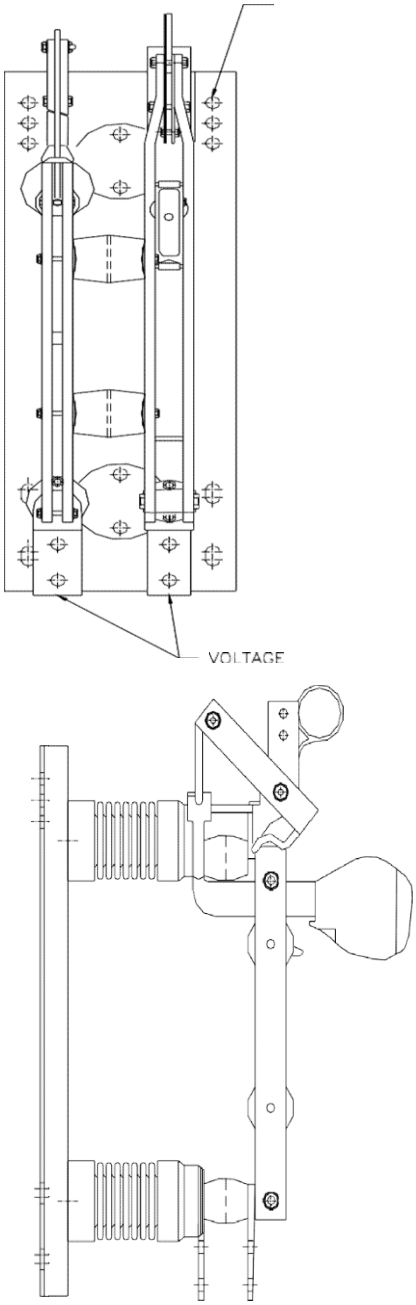

Note:

Drawing above is for conceptual purposes only

Voltage Regulator Bypass Switch

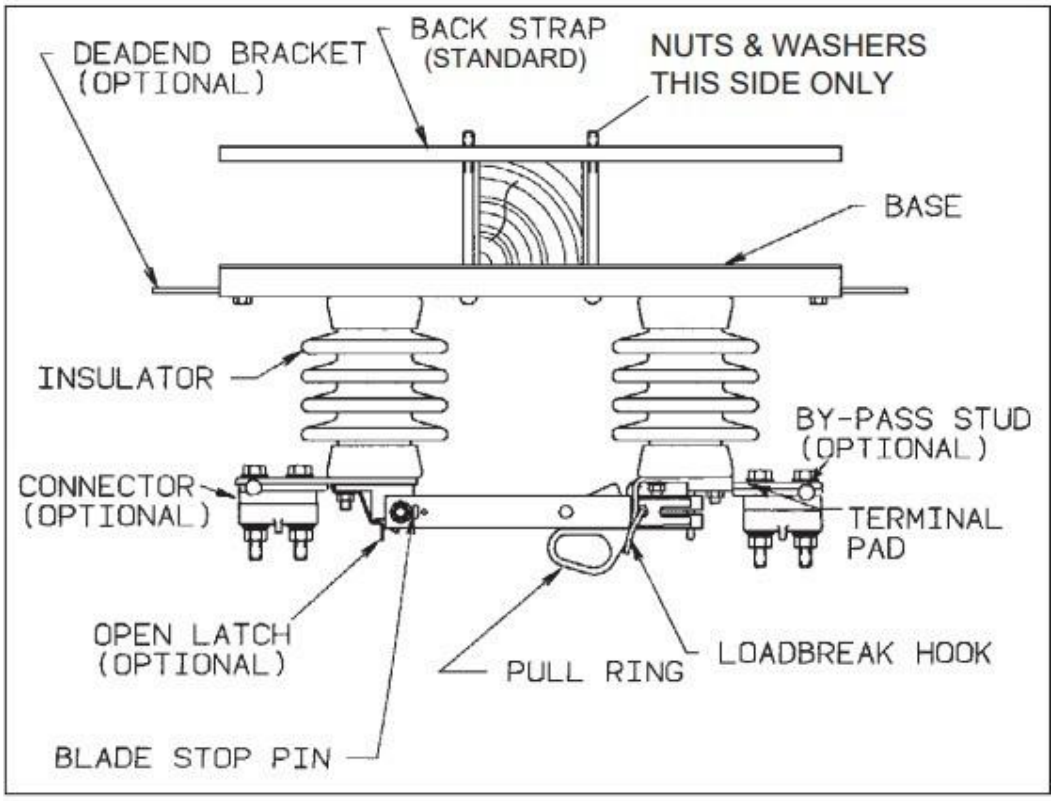

Note:

Drawing above is for conceptual purposes only

Single Phase Hook stick Operated Switch

Technical Specifications for Gang Operated Air Break Switches

1.0 Scope

This specification provides the minimum technical requirement for manufacture, design, andengineering, testing, inspection, delivery and performance requirement for 15 kV Gang Operated Air Break (G.A.B) switches.

The G.A.B Switches are for outdoor installation and must be suitable with the option of mounting vertical, horizontal, or phase over phase.

2.0 Applicable Codes and Standards

The latest revision pf the following codes and standards shall be applicable for the equipment/materials covered in this specification. In the case of any deviation, the vendor/manufacturer may propose equipment/material conforming to an alternate code or standard.

- IEC 6060 High Voltage Test Technique
- IEC 60129 Alternating Current Disconnector and Earthing Switches.
- IEC 60168 Test on Indoor and Outdoor poet Insulators of Ceramic materials or Glass for system with normal voltages greater than 1000V.
- IEC 60437 Radio Interference test on High Voltage insulator
- IEC 60507 Artifical Pollution Test on High Voltage Insulators to be usedon AC System
- ANSI C 37.41 Design tests for High Voltage Fuses, Distribution including Air Switches, fuse discounting switch and accessories.
- ANSI C 37.42 Specification for Distribution Cut Outs and Fuse Links
- BS 729 Galvanizing

In case of any deviation from the listed standards, it should be indicated in the list of deviation submitted by the supplier.

3.0 Service Conditions

The G.A.B shall be suitable for continuous, satisfactory operation under climatic conditionslisted below: -

- Maximum altitude above mean sea level less than 1,000 m;
- Maximum ambient air temperature 40^0C;
- Maximum daily average ambient air temperature 30^0C;
- Minimum ambient temperature15^0C; and
- Maximum relative humidity 100%.

The G.A.B shall be designed and protected for use in exposed, heavily polluted, and salty, corrosive, and humid tropical coastal atmospheric conditions.

4.0 System Parameters

The systems on which the isolators will be installed will be:

- Nominal System Voltage, kV 13.8 kV
- Highest System Voltage, kV 15 kV
- Nominal Frequency (±5%) 60Hz
- Solidly earthed

5.0 General Technical Specification

The G.A.B Switches should have the technical particulars as detailed below

- Current rating: 900Amps
- The G.A.B shall be capable of switching load current with full recovery voltage across the switch and interrupting transformer magnetizing current and overhead linecharging current. This shall allow all switching operation do be done live such as disconnecting/connecting tie lines/paralleling of feeders. Load break switch shall be equipped with permanently fitted load break devices, suitable of interrupting rated current and shall be capable of closing on faults.
- Basic insulation level: 110 kV
- The rated r.m.s short time current for one second shall be: 21 kA.
- Radio Influence: 250µV at 1MHz

- Creepage distance are based on line to line nominal voltage. Creepage/ leakage distance shall be 25/40mm/kV minimum.
- Main Assembly
    - This specification cover three-pole disconnectors, which shall be suitable for vertical, horizontal or phase over phase mounting, mounted on a fabricated galvanize steel base, and operated by a permanently fitted handle and link. The moving contact for each phase, which is normally in the closed position is opened by the operation of the handle.
    - All the moving contacts mechanically linked to provide simultaneous isolationof all three phases.
    - Arc extinguishing devices shall be fitted on the fixed contacts to provide protection to the main contacts from erosion.
- The insulators shall be the solid glazed porcelain type and shall be bird proof. Color shall be either gray or brown. The insulators shall be rigidly connected to the base sothat deflection of the insulators under short circuit conditions is kept to a minimum and there is no tendency for them to work loose from base.
- Contacts:
    - The current carrying contact area shall be of silver plated copper of high conductivity. The fixed contact at which the circuit is broken shall be split head contact shaped to accept the disconnect blade, parallel to the direction ofmotion of the blade.
- Bearing and Guide:
    - The supplier shall specifically state the material and finishing of both rubbing and rolling surfaces at every point where rotation or other movement occurs and the measures taken to ensure easy movement both initially and throughoutthe life of the disconnector.
- Operating gear shall be from the ground by means of a handle. The supplier shall show how variation in height is provided for and state the maximum height over ground at which the disconnector can be effectively operated. All joints employed in the operating linkage must be capable of withstanding vibration due to wind so that noslackening can occur.
    - A suitable insulated barrier shall be fitted in the operating link to safeguardany person operating the G.A.B

- All operating gears shall be designed to minimize accumulation of dust and corrosion.
- The position and arrangement of the complete gear including all supports shallbe shown in **submittal drawing** and also the means of locking the handle in both the 'ON' and "OFF' positions by means of padlock.

- Operating Speed and Effort:

  The supplier shall state the minimum speed or time to complete the operation to interrupt the current and also the initial and follow through pull needed to carry out this operation at any time during the life time of the G.A.B. assuming that the recommended maintenance is regularly carried out. The supplier shall provide operation and maintenance manual along with the load break switch G.A.B.

- Connections:

  The terminals on the load break switch for connection of line conductors must be suchthat connections cannot work loose due to vibration. The terminals shall be suitable for copper, ACSR/AW, Aluminum and aluminum alloy conductors without risk of corrosion. The material used shall consist of suitable alloy plated copper. The terminals shall be designed for use with compression lugs, provided with M12 studs, nuts and washers for fixing the lug and shall be suitable for the standard sizes of conductors for by Guyana Power & Light.

- Earthing Facilities:

  G.A.B shall be provided with M12 studs, nuts and washers in an accessible positionfor earthing the operating gear and frame work. These shall be used to fix a copper compression earthing lug.

- Earthing of Operating Handle:

  The operating handle shall have a suitable means of attaching an earth lead.

- Galvanizing:

All iron components shall be coated with zinc or a material having equivalent protection against atmospheric corrosion. If coated by the hot dip galvanizing method,coating shall be made in accordance with BS 729.

- The supplier shall state weight/thickness of zinc coating on the attached schedule.

6.0 Marking

Each G.A.B shall be provided with a weather proof and corrosion proof name plate and shall give the following information in English.

- Purchase order /tender No.
- Manufacturer name.
- Year of manufacturing.
- Type of G.A.B
- Rated current.
- Rated short time withstand current.
- Rated voltage.
- Short circuit current.

7.0 TESTING AND INSPECTION:

- General:

All G.A.B shall be tested in accordance with the latest standards and as specified herein. The supplier shall provide acceptable type test and routine test certificates for his offered G.A.B Guyana Power & Light (G.P.L) at his discretion may wish to have additional or to repeat type test being carried out. Two certified copies of the test reports shall be submitted to the SEC for approval. No G.A.B shall be shipped until approval of the test reports has been given by G.P.L. Routine and /or sample tests shall be carried at the supplier/manufacturer factory. Type tests shall be carried out at independent testing laboratory and be witnessed by a representative of an independenttesting laboratory.

Type Test

All G.A.B shall be type tested in accordance with the latest standards in this specification given below.

- Dielectric tests to IEC 60129 clause 6.1.
- Power frequency withstand (1 minute dry & wet).
- Impulse withstand (1.2 x 50 µsec).
- Temperature rise test to IEC 60129 clause 6.3.
- Resistance tests to IEC 60129 clause 6.4.
- Short time withstand current and peak current withstand tests to IEC 60129 clause 6.5.
- Operating and mechanical endurance tests to IEC 60129 clause 6.104
- Test for measuring Radio interference levels to IEC 60437.
- Pollution tests to IEC 60507.
- Load break tests to ANSI C 37.41 clause7

- Routine Tests:

All offered G.A.B shall meet the routine test requirements of the standards given below:

- Power frequency voltage withstand test (dry) to IEC60129 clause 7.1.
- Voltage tests on control and auxiliary circuits to IEC 60129 clause 7.2
- Measurement of the resistance of main circuit to IEC 60129 clause 7.3
- Mechanical operating tests to IEC 60129 clause 7.101

- Inspection:

Guyana Power & light may wish to witness tests or visit the factory during manufacture of any or all Items covered by this specification. Accordingly, the supplier shall be give the purchaser adequate notice of manufacturing program and test to be witnessed. G.P.L may require certificates and data from the manufacturer/supplier on all pertinent aspects of the manufacturing process.

8.0 PACKING AND SHIPMENT

- Each G.A.B shall be packed individually in a strong nonreturnable wooden crate in such manner to prevent damage components during transportation and handling up to installation site.
- Packing shall be designed to prevent entry of dust, ingress of moisture and other foreign materials.
- Packing shall be marked with the following:
    - Manufacture's name
    - Country of origin.
    - Guyana Power & Light purchase order number.
    - Weight in kilogram.
    - Handling instruction.
    - Voltage and current rating
- Supplier shall contact material department for additional packing, handling and shipment instructions as applicable.
- G.AB shall not be packed in any organic material.

9.0 GUARANTEE

- Vendor shall guarantee the G.A.B against all the defects arising out of faulty design, workmanship or defective material for a period of of five (5) years from the date of delivery.
- If no exception/deviations are taken to this specification and no list of deviations is submitted, it shall be deemed that, in every respect, the offered G.A.B and their accessories conform to this specification. A reference list of the present users of the offered load break switch with the relevant address and fax No. shall be included.

10.0 CONCEPTUAL DRAWING

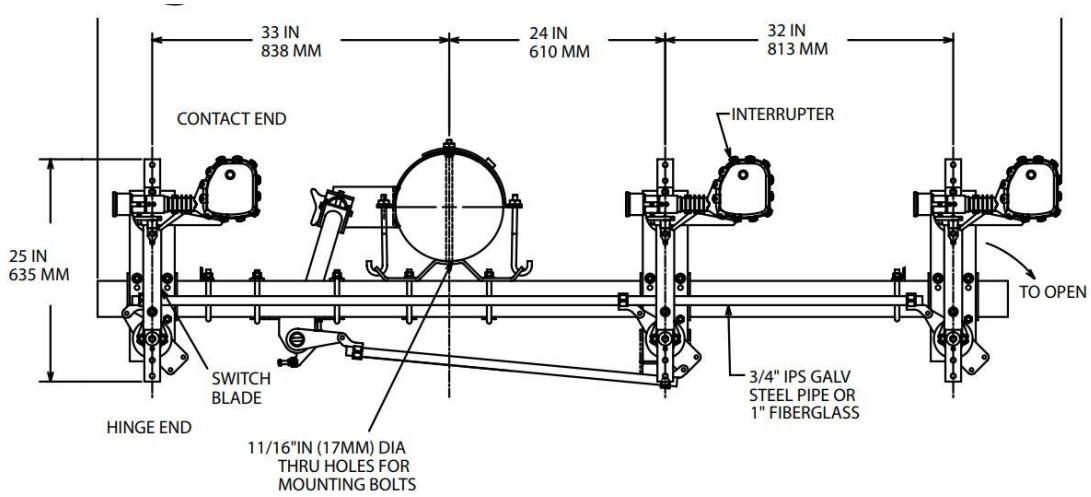

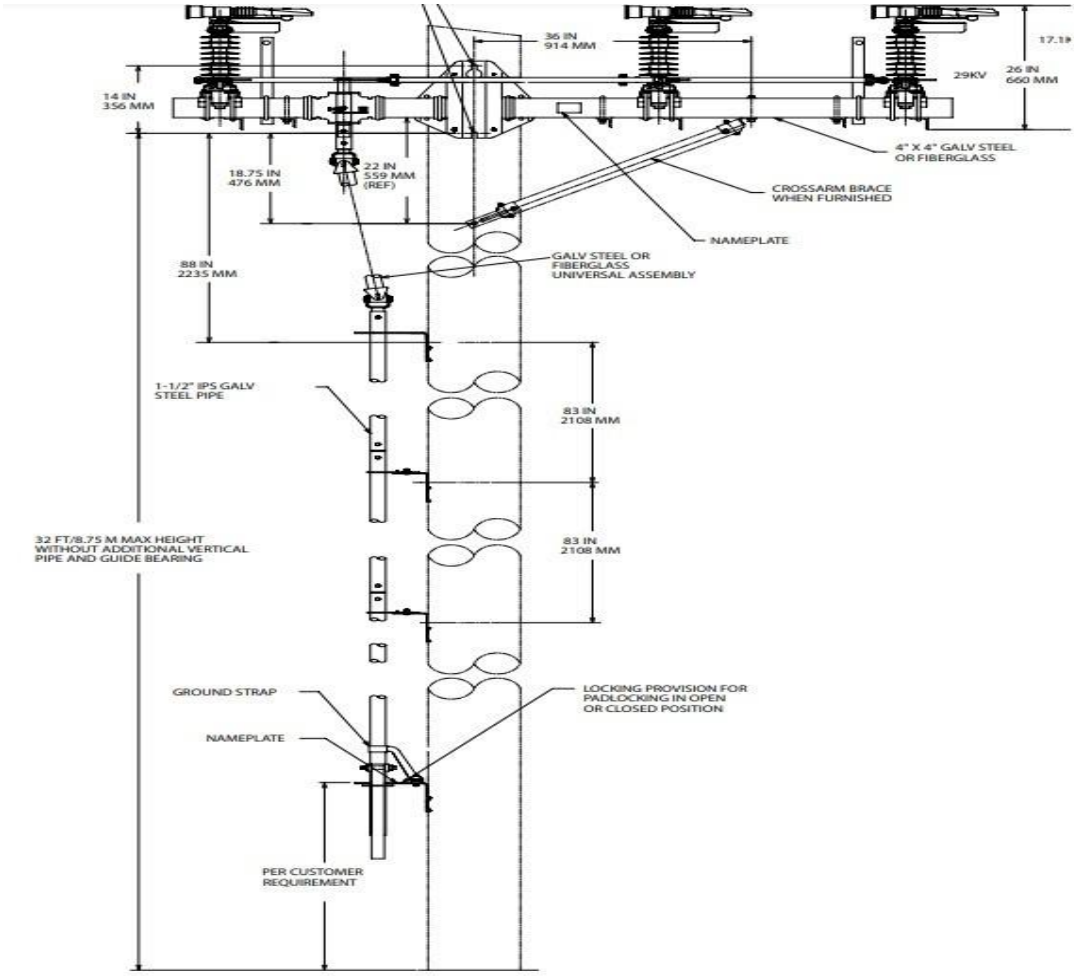

Horizontal Mounted Gang Operated Switch

11.0 TECHNICAL DATA SCHEDULE

- The vendor shall complete and return one copy of the attached technical data schedulewith quotation. In addition to data schedule, submittal for clauses from 10.2 shall be provided with quotations.
- Detailed dimensional drawing of the Load break switch showing mounting arrangements.
- Type test certificates.
    - Submittals required following award of contract are given below.
        - Manufacturing schedule, progress report and test schedule.
    - Test reports

SCHEDULE 1: Technical Data Schedule

Gang Operated Air Break (G.A.B)

Item No._____

S/N	Description	Unit	G.P.L Specified Values	Bidders' Values
1	System Voltage	kV	13.8	
2	Rated Voltage	kV	15	
3	Continuous current capacity	A	900	
4	Breaking current capacity	A	900	
5	Short time withstand current (1sec)	kA	21	
6	Creepage Distance	mm/kV	25/40	
7	Dry flash over voltage	kV		
8	Wet flash over voltage	kV		
9	Max radio interference voltage	µV	250	
10	Ambient temperature during temperature rise test	°C		
11	Temperature rise of contacts	°C		
12	Temperature rise of terminal	°C		
13	Material of support insulators and color.	-	Porcelain Glazed Gray	
14	Bird proof insulators	-	Required	
15	Minimum clearance between phases and earth	mm		
16	Method of attachment of insulator to insulator base	-		
17	Minimum clearance between phases and earth	mm		
18	State main contacts material	-		
19	State main contacts plating material	-		
20	All current carrying parts of copper or copper alloy	-	Vendor	
21	All ferrous components galvanized	-	Vendor	
22	operating speeds	-	Vendor	
23	Short circuit levels	kA	21	
24	Fitting of permanent load break device	-	Required	
25	Fault closing capability	-	Required	

Technical Specification for Distribution Arrestors

1.0 Scope

This specification covers the design, manufacture, testing, supply and performance requirements for gapless metal oxide, and polymeric housed transmission type surge arrestersfor outdoor use.

2.0 Definition

2.1 Surge Arrester

A device designed to protect electrical apparatus from high transient over voltages.

2.2 Gapless Metal-Oxide Surge Arrestor

A surge arrester having one or several non-linear metal-oxide resistors with highly non-linear voltage-current characteristics, connected in series, but having no integrated series or parallel spark gaps.

2.3 Polymeric housed Surge Arrestor

A surge arrester with a housing made of polymeric material without air voids neither betweenthe housing and the metal-oxide resistors nor the housing itself. Arresters must have directly moulded housings. Arresters manufactured by slip-on, pre molded housing will not be accepted in view of the weak interface between the housing and the assembled disc.

2.4 Bonding between Housing and Metal-oxide Resistors/ Interfacial sealing The adhesion between the polymeric housing and the metal-oxide resistors or any other metallic or non-metallic parts inside the housing must be strong enough, homogeneous, robust, and resistant to thermal cycles and environmental stresses.

3.0 Service Conditions

The Surge Arresters and accessories shall be suitable for continuous, satisfactory operationunder climatic conditions listed below: -

- Maximum altitude above mean sea level less than 1,000 m;
- Maximum ambient air temperature 40^0C;
- Maximum daily average ambient air temperature 30^0C;
- Minimum ambient temperature15^0C; and
- Maximum relative humidity 100%.

4.0 System Parameters

The arrester must be able to operate under the system parameters mentioned in thisspecification.

Nominal System voltage, Frequency	69 kV, 60 Hz.
Grounding of Neutral	Effective Grounded
Temporary Overvoltage	54 kV
Number of Phases	3 Phases
Insulation Withstand Level (BIL)	350 kV

5.0 Technical Specification

The Surge Arresters shall conform to the technical requirements given below:

5.1 Polymeric Housing Material

The polymer material which is used for the arrester housing must be tracking and erosionresistant, stabilized against UV radiation and have proven records of at least 15 years in similar applications.

5.2 Housing and Mechanical Requirements

The arrester shall meet the following specifications:

- Creepage Length 1260 mm (min.)
- Cantilever Load 3000 Nm (min)

5.3 Electrical Requirements

The arrester shall meet the following specifications based on IEC 60099-4:

- Line Discharge Class 2
- Rated voltage of Surge Arrestor 54 kV rms
- MCOV of Surge Arrestor 43 kV
- Nominal, 8/20µs, discharge current rating 10 kA_{Peak}
- Wet Power Frequency Withstand Voltage 140 KV rms
- Maximum steep current impulse residual voltage for a 2kA, 30/60µs, dischargecurrent: 127 kV_{peak}

6.0 Accessories

The mounting accessories shall be designed to match all mechanical and electricalrequirements specified for the arrester.

6.1 Mounting

Arresters shall be suitable for vertical and horizontal mounting.

6.2 Terminals

The line and ground terminals of the arrester shall be 3/8-16 or M12 threads. All external metal parts (excluding the mounting bracket and associated hardware) will be stainless steel.However, it is permitted that the hex nuts on the line and ground end may be brass.

6.3 Disconnector

The earth end shall get connected to the earth terminal of the arrester through disconnector. The function of the disconnector is that in the event of, operation of surge arrester, the currentshall pass to earth and the disconnector shall disconnect (isolate) the earth terminal and it shall remain suspended on the mounting of the arrester. There by it will be disconnected fromthe earth and shall provide visual indication to the patrolling personnel. The line can be recharged without isolating the damaged arrester.

7.0 Corrosion Protection

The arrester and all its accessories shall be adequately protected against corrosion. All exposed ferrous components, unless of stainless steel or other non-corrosive metal, shall behot dip galvanized. Hardware shall be of stainless steel.

8.0 Tender Sample

ONE tender sample of offered Polymeric surge arrester with disconnector will have to besubmitted along with the offer.

9.0 TESTING

The arresters shall be tested in accordance with the following latest standards

- IEC 60099-4/ 2004-05 Standard

9.1 Location of Tests

Routine tests and acceptance tests shall be carried out at the supplier’s factory. Type testsshall be carried out in internationally recognized laboratories.

9.2 Type Test for Arresters with Polymeric Housing.

All the tenderers must submit copies of type test certificates along with laboratory approved drawings for the products offered by them. Surge arresters offered shall be manufactured withthe same configuration & raw materials as used in the surge arrester for which type test reports are submitted.

- Insulation Withstand Test on Arrester Housing
- Residual Voltage Tests
- Long Duration Current Impulse Withstand Test

- Operating Duty Test

- Partial Discharge Voltage Test
- Accelerated ageing test
- Power frequency voltage versus time characteristics
- Short Circuit Test/Mode of Failure Test

10.0 Routine Tests

The manufacturer shall carry out the following routine tests on each single arrester inaccordance with IEC 60099-4/ 2004-05 Standard.

- AC Reference Voltage Test (final arrester)
- Partial Discharge Test (final arrester including hardware/accessories)
- Residual Voltage Test (final arrester or metal-oxide resistors)

The manufacturer shall provide a routine test report including all relevant details with respectto the test limits. On request, the manufacturer shall also provide a routine test protocol including all measuring results. ***Sample tests are not acceptable.***

11.0 Acceptance Tests

The acceptance tests shall be carried out as per IEC: 60099-4/ 2004-05 standard.

- Power frequency reference voltage test
- Lightning impulse residual voltage test
- Internal partial discharge test
- Visual examination & Dimensional verification

12.0 Marking

Each arrester shall be provided with a nameplate, bearing the following information, as aminimum, in English language:

- Arrester Type
- IEC standard
- Continuous Operating Voltage Uc
- Rate Voltage Ur
- Nominal Discharge Current
- Rated Short Circuit Current

- Manufacturers name or trademark

- Month & Year of manufacture
- Date of supply with period of guarantee

13.0 Drawings

The tenderer shall furnish catalogues, literature, and detailed dimensional drawings of complete arrester with disconnector showing clearances, polymeric housing details & nameplate details.

14.0 Quality Assurance

The manufacturer shall be certified in accordance with ISO 9001. The supplier has to providea copy of a valid certificate along with his quote. Relevant manuals shall be presented upon request.

15.0 Packing and Shipment

Arresters shall be securely packed, complete with all accessories, in strong non-returnableboxes, in such a manner as to prevent damage during shipment.

SCHEDULE 1: GUARANTEED TECHNICAL PARTICULARS

REQUIREMENTS FOR GAPLESS METAL OXIDE TRANSMISSION TYPE ARRESTERS WITH POLYMERIC HOUSING

Table to be filled in by the manufacturer / Definitions according to IEC 60099-4

No.	Description		Offered by Bidders
1	Name of Manufacturer		
2	Arrestor Type or Designation		
3	Arrester Continuous Operating Voltage Uc	kV rms	
4	Arrester Rated Voltage Ur	kV rms	
5	Nominal Discharge Current In	kA	
6	Line Discharge Class		
7	High Current Discharge Current 4/10µs	kA	
8	Long Duration Current Amplitude	A	
9	Long Duration Current Duration	µS	
10	Rated Short Circuit Current Isc		
	a. High Current	kA	
	b. Low Current	A	
11	Pull Strength	N	
12	Cantilever Strength	Nm	
13	Torque strength	Nm	
14	Total Height of Arrester	mm	
15	Creepage Length	mm	
16	Flashover Distance	mm	
17	Lightning Impulse 1.2/50µs Withstand Level	kVp	
18	Wet Power Frequency Withstand level	kV rms	
19	Housing Type		
20	Housing Materials		
21	Colour of Housing		
22	Reference Current	mA	
23	Reference Voltage Range (min/max)	kV	
24	Max. Partial Discharge Level	pc	
25	TOV Curve enclosed?	yes/no	
26	Arrester will be able to operate under the system parameters mentioned in cl.no.4 ?	yes/no	
27	Maximum Residual Voltage of Arrester for:		
	Lightning Current Impulse 8/20 µs at 2.5 kA	kV	

	Lightning Current Impulse 8/20 μs at	kV	

	5 kA		
	Lightning Current Impulse 8/20 µs at 10 kA	kV	
	Steep Lightning Current Impulse 1/10 µs at Nominal Discharge Current In	kV	
28	Minimum recommended Center-to-Center Distance between Arresters	mm	
29	Minimum recommended Distance from Center of Arrester to nearest Grounded Object	mm	
30	Whether earth disconnector, as mentioned in the specification, is provided	yes/no	

Technical Specification for Connectors & Sleeve

1.0 Glossary

AWG *American wire gauge*

GPL *Guyana Power and Light Incorporated*

2.0 Scope

This specification sets out the technical requirements for connectors and sleeves to be used on distributionnetworks.

3.0 Environmental Conditions

3.1 The connectors and sleeves to be supplied against this specification shall be suitable for satisfactorycontinuous operation under the following environmental conditions.

a. Maximum altitude above mean sea level less than 1,000 m;
b. Maximum ambient air temperature 40^0C;
c. Maximum daily average ambient air temperature 30^0C;
d. Minimum ambient temperature15^0C; and
e. Maximum relative humidity 100%.

3.2.The connectors and sleeve shall be designed and protected for use in exposed, heavily polluted, and salty,corrosive, and humid tropical coastal atmospheric conditions.

4.0 Requirements

4.1 The requirements for the connectors and sleeve will be listed in the following order as shown in the tablebelow:

Item #	Description
CS001	Connector, Alum - 4/0 - 4/0
CS002	SLEEVE COMPR SERVICE – HOT
CS003	SLEEVE COMPR SERVICE – NEUTRAL
CS004	SLEEVE COMPR SERVICE - HOT
CS005	SLEEVE COMPR SERVICE – NEUTRAL

CS006	SLEEVE, PRE-INSUL, SERVICE
CS007	Connector- T TAP With Slotted T PAD
CS008	CONNECTOR, GROUND 5/8"
CS009	CONNECTOR , 50MM -50MM
CS010	CONNECTOR , ALUM . HYCRIMP
CS011	CONNECTOR , ALUM. SQEEZON, 1/0 TAP - 1/0 MAIN

CS012	CONNECTOR , 1/0 - 2/0
CS013	CONNECTOR , SQUEEZON
CS014	CONNECTOR ,ALUM.
CS015	CONNECTOR ,COMPR 4/0 -3/0
CS016	CONNECTOR BOX,
CS017	CONNECTOR,OXLIP 400/500
CS018	CONNECTOR COMPR TAP 4/0 #1
CS019	SLEEVE COMPR SERVICE, 40 - 100 MM^2
CS020	CONNECTOR COMPR TAP 500 - 4/0
CS021	CONNECTOR, COMPRESSION
CS022	CONNECTOR, COMPRESSION TAP
CS023	CONNECTOR, COMPRESSION
CS024	CONNECTOR, COMPRESSION
CS025	CONNECTOR, COMPRESSION
CS026	CONNECTOR, COMPRESSION
CS027	CONNECTOR, COMPRESSION
CS028	CONNECTOR, COMPRESSION TAP
CS029	CONNECTOR, COMPRESSION TAP
CS030	CONNECTOR, COMPRESSION TAP
CS031	SLEEVE COMPR SERVICE
CS032	CONNECTOR SERVIT
CS033	CONNECTOR SPLIT BOLT 4/0 AWG
CS034	CONNECTOR, SQ ON
CS035	CONNECTOR, SQ ON
CS036	CONNECTOR, SQ ON
CS037	CONNECTOR, SQ UEEZEON
CS038	CONNECTOR SQUEEZON
CS039	CONNECTOR, TRITAP 4/0 - 6 STR
CS040	CONNECTORS
CS041	CONNECTOR, GROUND WIRE 4/0 - 4 AWG.
CS042	CONNECTOR, 3/0 - 3/0 AWG.
CS043	CONNECTOR, ALUM HYCRIMP
CS044	CONNECTOR, ALUM HYCRIMP
CS045	CONNECTOR, OKLIP 1/0 - 4/0 - 6 - 4/0
CS046	CONNECTOR, COMP. TAP 4/0 - # 1 AL./ 2/0 - #1
CS047	CONNECTOR, 2 - 1/0
CS048	Connector, #3-#6/#3-#6
CS049	CONNECTOR, 1/0 - 4/0 - 6 AWG. NO. GEB 4/0-6
CS050	Connector, 39735-226.8-1/0-6
CS051	Connector, Alum
CS052	CONNECTOR

CS053	CONNECTOR, 5 - 4/0-500
CS054	CONNECTOR, COMPR. TAP 1/0 AWG POPPY/POPPY
CS055	CONNECTOR, CRIMP 100/20MMsq 3/0 - 4/0

CS056	CONNECTOR, CRIMP 2/0-4/0 TULIP / OXLIP 170MM/100MMsq
CS057	Connector, crimp 250mm-250mm
CS058	CONNECTOR, CRIMP 4 SOL-4SOL GROUND WIRE 20MM/30MMsq
CS059	CONNECTOR GROUND WIRE 20MM/20MMsq
CS060	CONNECTOR, PIERCING TAP 4/0 - 1/0 - 6 AWG.
CS061	CONNECTOR, TENSION ALUM. COMPR. 266.8MCM
CS062	CONNECTOR, TRITAP 1/0 - 8 SOL
CS063	CONNECTOR, UNIV SERVIT NO. 350-4/0 AWG, PFB-185
CS064	CONNECTOR, OKLIP 250-300 / 6-350
CS065	CONNECTOR
CS066	CONNECTOR, CRIMP 170/20MMsq
CS067	CONNECTOR, TULIP / POPPY CRIMP 170/20MMsq
CS068	CONNECTOR, CRIMP 4/0AWG
CS069	CONNECTOR, 8 / 2
CS070	CONNECTOR, INSULATOR PIERCING 4/0-6/0AWG
CS071	CONNECTOR, ALUM. COMPR.
CS072	CONNECTOR, INSULATOR PIERCING 4/0-1/0AWG
CS073	SECONDARY CONNECTOR
CS074	SLEEVE ALUM COMPR REPACIT (partridge)
CS075	SLEEVE COMPR SERVICE PT - HOT
CS076	Sleeve, Compr. Service - NEUTRAL
CS077	Sleeve,Compr. Service - NEUTRAL
CS078	Sleeve,Compr. Service- NEUTRAL
CS079	SLEEVE, COMPR. 2 - 1STR. AWG
CS080	SLEEVE COMPR SERVICE PT - NEUTRAL
CS081	SLEEVE COMPR SERVICE PT- NEUTRAL
CS082	SLEEVE COMPR SERVICE PT- NEUTRAL
CS083	SLEEVE COMPR SERVICE PT - HOT
CS084	SLEEVE COMPR SERVICE - NEUTRAL
CS085	SLEEVE COMPR SERVICE - HOT
CS086	SLEEVE COMPR SERVICE - NEUTRAL
CS087	SLEEVE COMPR SERVICE - NEUTRAL
CS088	SLEEVE COMPR SERVICE - NEUTRAL
CS089	SLEEVE COMPR SERVICE #4-#10 - HOT
CS090	SLEEVE COMPR SERVICE - HOT
CS091	SLEEVE COMPR SERVICE - HOT
CS092	SLEEVE COMPR SERVICE - HOT
CS093	SLEEVE COMPR SERVICE - HOT
CS094	SLEEVE COMPR SERVICE - HOT
CS095	SLEEVE COMPR SERVICE - HOT
CS096	SLEEVE, COSMOS 477 477 MCM

CS097	Sleeve Insulink
CS098	SLEEVE TENSION
CS099	SLEEVE TENSION VIZSLA #6AWG

CS100	SLEEVE, TENSION
CS101	SLEEVE TULIP 336.4MCM
CS102	SLEEVE, PRE-INSUL. SERVICE
CS103	SLEEVE, PRE-INSUL. SERVICE
CS104	SLEEVE, 2 ACSR
CS105	SLEEVE 2PC -266 ACSR
CS106	SLEEVE, 4 ACSR
CS107	SLEEVE, COMPR. SERVICE 3-4STR. AWG.
CS108	SLEEVE, PRE-INSUL. SERVICE
CS109	SLEEVE, PRE-INSUL. SERVICE
CS110	SLEEVE, PRE-INSUL. SERVICE
CS111	SLEEVE, PRE-INSUL. SERVICE
CS112	SLEEVE, PRE-INSUL. SERVICE
CS113	SLEEVE, PRE-INSUL. SERVICE
CS114	SLEEVE, PRE-INSUL. SERVICE
CS115	SLEEVE, PRE-INSUL. SERVICE
CS116	SLEEVE; ALUM TUBE SERVICE
CS117	SLEEVE; ALUM TUBE SERVICE
CS118	SLEEVE; ALUM TUBE SERVICE
CS119	SLEEVE; ALUM TUBE SERVICE
CS120	SLEEVE; ALUM TUBE SERVICE
CS121	SLEEVE; ALUM TUBE SERVICE
CS122	SLEEVE; ALUM TUBE SERVICE
CS123	SLEEVE; ALUM TUBE SERVICE
CS124	SLEEVE; ALUM TUBE SERVICE
CS125	SLEEVE; PRE-INSUL SERVICE
CS126	SLEEVE; PRE-INSUL SERVICE
CS127	SLEEVE; PRE-INSUL SERVICE
CS128	SLEEVE; PRE-INSUL SERVICE
CS129	SLEEVE COMPR SERVICE - HOT
CS130	SLEEVE COMPR SERVICE HOT
CS131	Connector,T - Tap Disconnectable - 2N
CS132	Connector,T - Tap Disconnectable 2N
CS133	Connector, Crimp
CS134	Connector, Crimp
CS135	Connector, Split Bolt
CS136	Connector, Multitap 4 AWG

4.2 CS001

Item #	Groove A (Run)				Groove B (Tap)				Dimensions		
	Wire Diameter Range	Sol.	Str.	ACSR	Wire Diameter Range	Sol.	Str.	ACSR	H	L	W
CS001	0.461 - 0.563	250-300	3/0 – 4/0	3/0 (6/1) - 4/0 (6/1)	0.461 - 0.563	250-300	3/0 – 4/0	3/0 (6/1) - 4/0 (6/1)	1.4	2.5	0.84

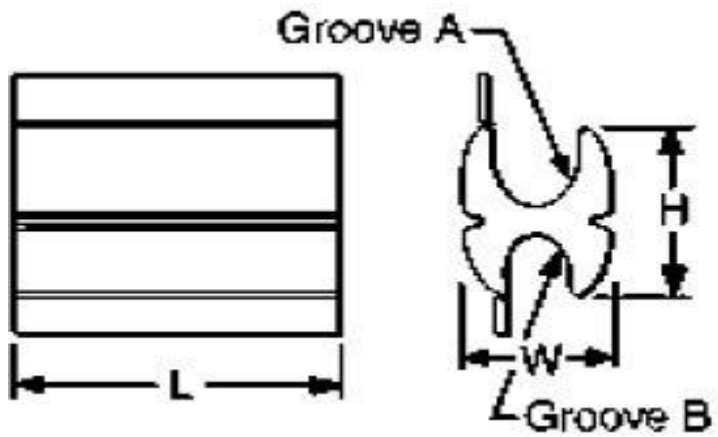

- Materials: Aluminum
- Must be prefilled with oxide inhibitor joint compound and strip sealed to limit oxide growth andincrease life of the connection.

4.3 CS002

Conductor A (AWG)						Conductor B (AWG)					
Color	ACSR	Str.	Sol.	Diameter (in.)		Color	ACSR	Str.	Sol.	Diameter (in.)	
				Max.	Min.					Max.	Min.
Red	#2	#1&#2	-	0.328	0.268	Red	#2	#1&#2	-	0.328	0.268

Constructed from aluminum for high conductivity

- Solid center barriers and large chamfers for easy cable insertion
- Tough stabilized nylon sleeves resist installing-tool pressure and provide reliable 600V insulation
- Must be prefilled with oxide inhibitor to prevent oxidation and keep out moisture
- All splices shall be color coded and marked with strip lengths, installation die codes and compressionlocations, providing easy identification for easy installation
- Comply with ANSI C119.4 when properly installed on aluminum-to-aluminum or aluminum-to copperconductors
- RUS accepted

4.4 CS003

Conductor A (AWG)						Conductor B (AWG)					
Color	**ACSR**	**Str.**	**Sol.**	**Diameter (in.)**		**Color**	**ACSR**	**Str.**	**Sol.**	**Diameter (in.)**	
				Max.	**Min.**					**Max.**	**Min.**
Orange	#4(6/1,7/1)	-	#2			Orange	#4(6/1,7/1)	-	#2		

- Constructed from aluminum for high conductivity
- Solid center barrier
- Must prefilled with oxide inhibitor to prevent oxidation and keep out moisture.
- Must comply with ANSI C119.4 when properly installed on aluminum-to-aluminum or aluminum-to-copper conductors

4.5 CS004

Conductor A (AWG)						Conductor B (AWG)					
Color	ACSR	Str.	Sol.	Diameter (in.)		Color	ACSR	Str.	Sol.	Diameter (in.)	
				Max.	Min.					Max.	Min.
Red	#2	#1&#2	-	0.328	0.268	Orange	#4	#4	#2	0.258	0.213

Constructed from aluminum for high conductivity

- Solid center barriers and large chamfers for easy cable insertion
- Tough stabilized nylon sleeves resist installing-tool pressure and provide reliable 600V insulation
- Must be prefilled with oxide inhibitor to prevent oxidation and keep out moisture
- All splices shall be color coded and marked with strip lengths, installation die codes and compressionlocations, providing easy identification for easy installation
- Comply with ANSI C119.4 when properly installed on aluminum-to-aluminum or aluminum-to copperconductors
- RUS accepted

4.6 CS005

Conductor A (AWG)						Conductor B (AWG)					
Color	ACSR	Str.	Sol.	Diameter (in.)		Color	ACSR	Str.	Sol.	Diameter (in.)	
				Max.	Min.					Max.	Min.

Orange	#4(6/1,7/1)	-	#2			Orange	-	#10	#8		

Constructed from aluminum for high conductivity

- Solid center barrier
- Must prefilled with oxide inhibitor to prevent oxidation and keep out moisture.
- Must comply with ANSI C119.4 when properly installed on aluminum-to-aluminum or aluminum-to-copper conductors

4.7 CS006

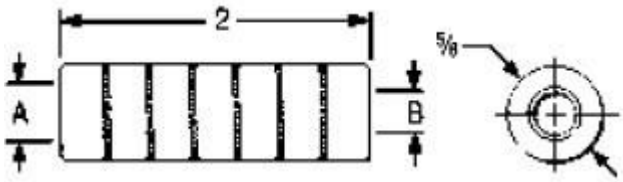

Item #	Side A			Side B			Die Index
	ACSR	Aluminum & Copper	Color Code	ACSR	Aluminum & Copper	Color Code	
CS006	2	2Str. 1Str. #1 Al Compt #2 Al Compt	Red	6	5,6 Str. 4 Sol. #4 Al Compt	Blue	

- Material: Aluminum (Uninsulated)
- Must be prefilled with oxide inhibitor joint compound and stripsealed to limit oxidation and increase thelife of the connection.

4.8 CS007

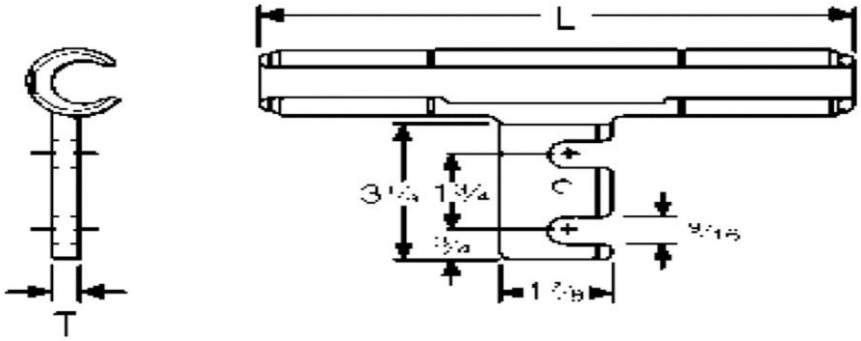

ACSR, 6201, 5005	Copper	Aluminum	L	T	Die Index	Tools, Die Sets Cat#, & (number of Crimps)					
						MD7, MD6	Y35, Y750,	Y45	Y46	Y48B	Y60BHU
477 (18-1)	400 (19, 37)	397.5 (19, 37, 61) 400 (19, 37, 61)	9-1/2	1/2	M	-	U-M (3) U317 (4)	-	-	-	-

- Material – Aluminum
- Design for east disconnecting of tap conductor

4.9 CS008

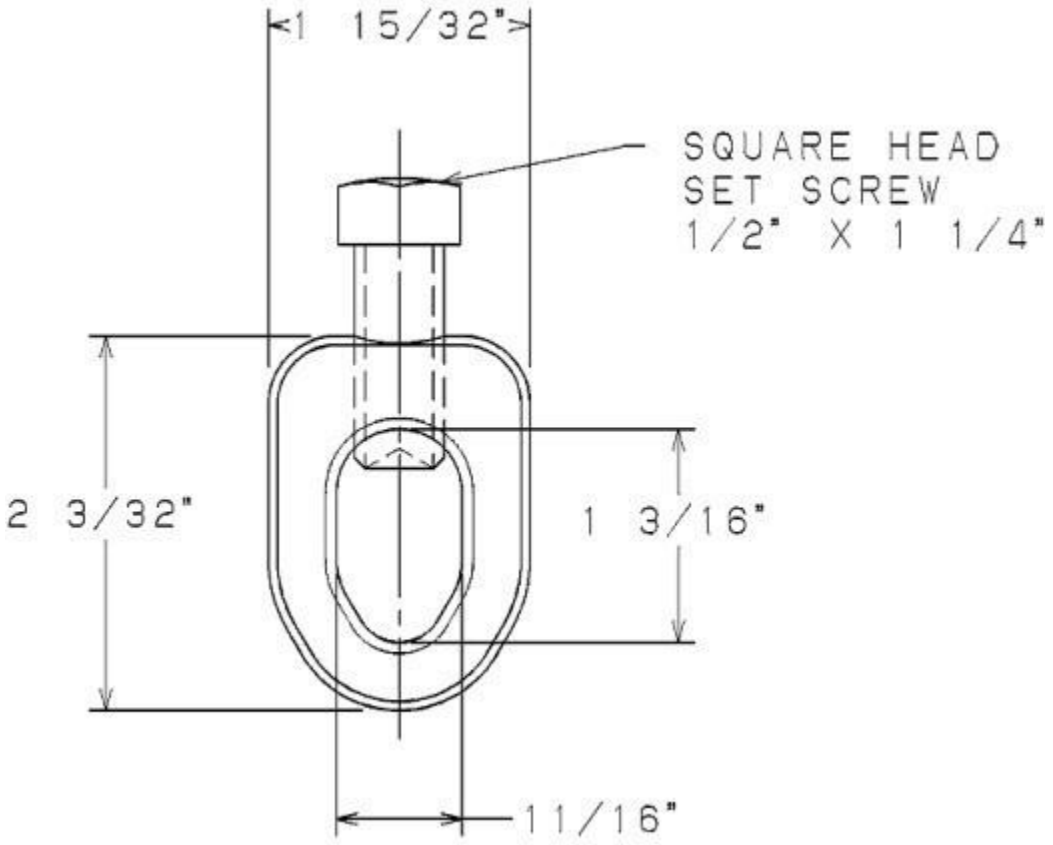

Material: Steel

Coating:

Galvanized, ASTM

A-153Diameter:

0.63 (5/8) in.

4.10 CS010

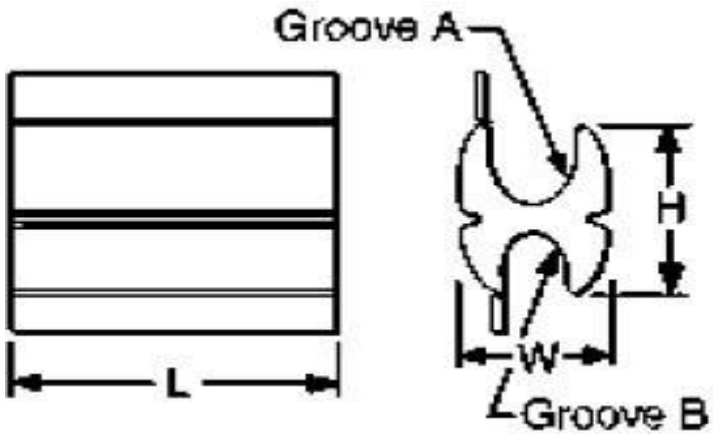

Item #	Groove A (Run)				Groove B (Tap)				Dimensions			Die Index
	Wire Diameter Range	Sol.	Str.	ACSR	Wire Diameter Range	Sol.	Str.	ACSR	H	L	W	
10	0.461 - 0.563	250 - 300	3/0 -4/0	3/0 -4/0	0.338 - 0.447	2/0 -3/0	#1,3 Str.-3/0	#1-2/0	1.42	2.25	0.89	D3

- Materials: Aluminum
- Must be prefilled with oxide inhibitor joint compound and strip sealed to limit oxide growth andincrease life of the connection

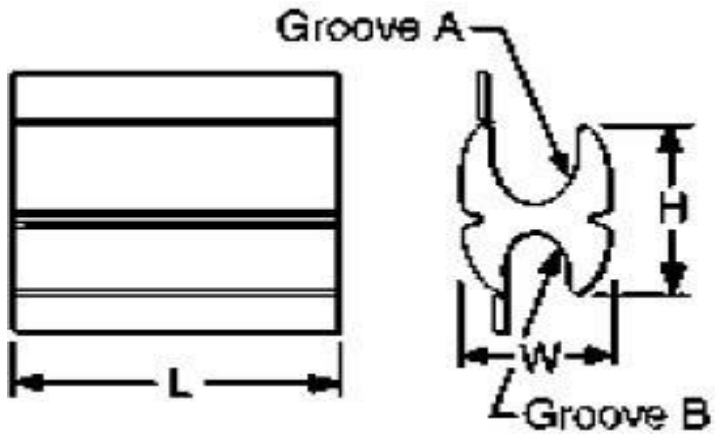

Item #	Groove A (Run)				Groove B (Tap)				Dimensions		
	Wire Diameter Range	**Sol.**	**Str.**	**ACSR**	**Wire Diameter Range**	**Sol.**	**Str.**	**ACSR**	**H**	**L**	**W**
11	0.336 – 0.470	2/0 – 4/0	1 – 3/0	#1 – 2/0	0.336 – 0.477	2/0 - 3/0	#1 - 2/0	#1-2/0	1.42	1.88	0.83

- Materials: Aluminum
- Must be prefilled with oxide inhibitor joint compound and strip sealed to limit oxide growth andincrease life of the connection

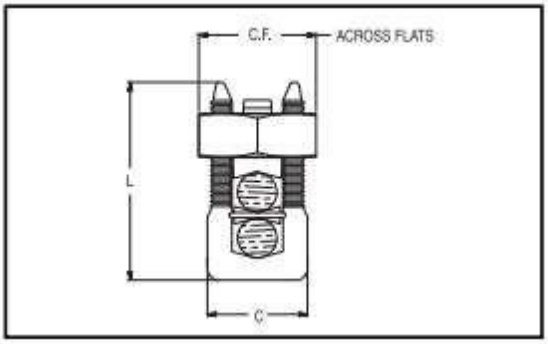

Cross Flat	L	W	Conductor					Recommended Tightening Torque in.-lb
			Run		Tap		Maximum Conductor Steel	
			Copper & Aluminum	ACSR,AAAC,5005	Copper & Aluminum	ACSR,AAAC,5005	Sol. 3 Str. Nom.BWG BWG Dia.	
1.04	1.93	1.19	1/0 Str.-2/0 Str.	1(6-1) – 1/0(6-1)	8Str. - 2/0 Str.	6(6-1) – 1/0(6-1)	- - 7/16	385

- Tin-plated, high strength, copper alloy split bolt with spacer
- Recommend to use oxide inhibitor with Aluminum and ACSR.

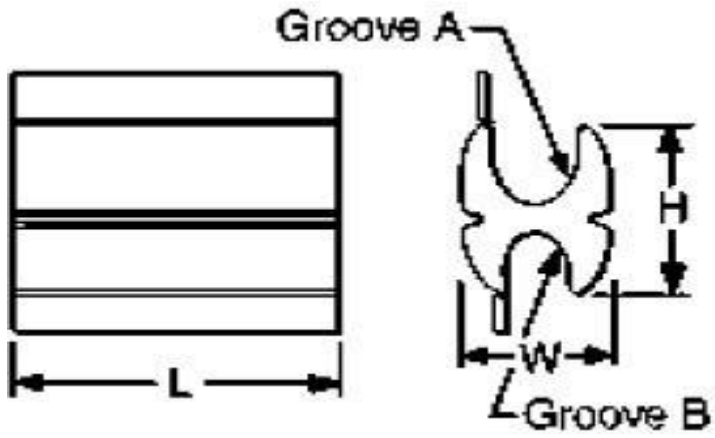

Groove	Standard Conductor			Compact Conductor		Wire Diameter Range		Die	Indents		
	ACSR & Aluminum Alloy	Aluminum or Copper				Max	Min				
		Stranded	Solid	ACSR	Stranded	(in.)			O	WH	Length
A	#4,3,2,1,1/0	#3-3,2,1, 1/0,2/0	#1,1/0,2/0,3/0	#2,1,1/0,2/0	#2,1,1/0,2/0	0.419	0.250	0			
B	#6,4,3,2	#6,4,3,2,1-19	#6,4,3,2,1,1/0	#6,4,3,2,1	#6,4,3,2,1	0.332	0.162		5	2	1-3/4”

- Materials: Aluminum
- Must be prefilled with oxide inhibitor joint compound and strip sealed to limit oxide growth andincrease life of the connection

4.14 CS014

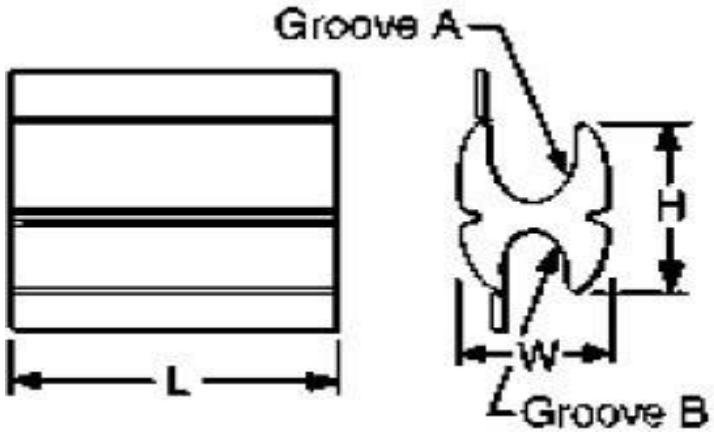

Groove A (Run)				Groove B (Tap)				Dimensions			Die Index
Wire Diameter Range	**Sol.**	**Str.**	**ACSR**	**Wire Diameter Range**	**Sol.**	**Str.**	**ACSR**	**H**	**L**	**W**	
0.336 - 0.470	2/0 -4/0	#1,3 Str.-3/0	#1-2/0	0.336 - 0.447	2/0 -3/0	#1,3 Str.-3/0	#1-2/0	1.42	1.88	0.89	D3

- Materials: Aluminum

Must be prefilled with oxide inhibitor joint compound and strip sealed to limit oxide growth and increase life ofthe connection

4.15 CS015, CS018, CS050 and CS051

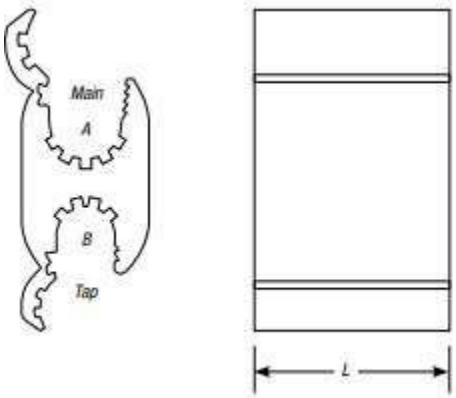

Item #	Main			Tap			Diameter (in.)				Connector Length (in.)
	ACSR	STR.	Sol.	ACSR	STR.	Sol.	Main		Tap		
							Max	Min.	Max.	Min.	
CS015	4/0, 3/0	4/0, 3/0	-	#4, #6	#3, #4, #6	#2, #3, #4, #6	0.563	0.461	0.266	0.162	1-7/8
CS018	4/0, 3/0	4/0, 3/0	-	#1, #2, #3, #4	1/0, #1, #2, #3	#1	0.563	0.461	0.374	0.266	1-7/8
CS050	397, 336, 266, 4/0	400,397,350, 366, 300, 266, 250, 4/0	-	397, 336, 266, 4/0	400,397,350, 366, 300, 266, 250, 4/0	-	0.743	0.502	0.743	0.520	3
CS051	1/0, #1, #2	2/0, 1/0, #1, #2	3/0, 2/0, 1/0, #1	#2, #4, #6	#1, #2, #3, #4, #6	1/0, #1, #2, #4, #6	0.419	0.266	0.332	0.162	1-11/16

- Made from 1350 Aluminum alloy for high strength and high conductivity
- Standard compression tools and die install all size – no special tools will be needed
- Must be prefilled with oxide inhibitor held captive in the rib/connection area
- Must complies with ANSI C119.4 Specification

4.16 CS016

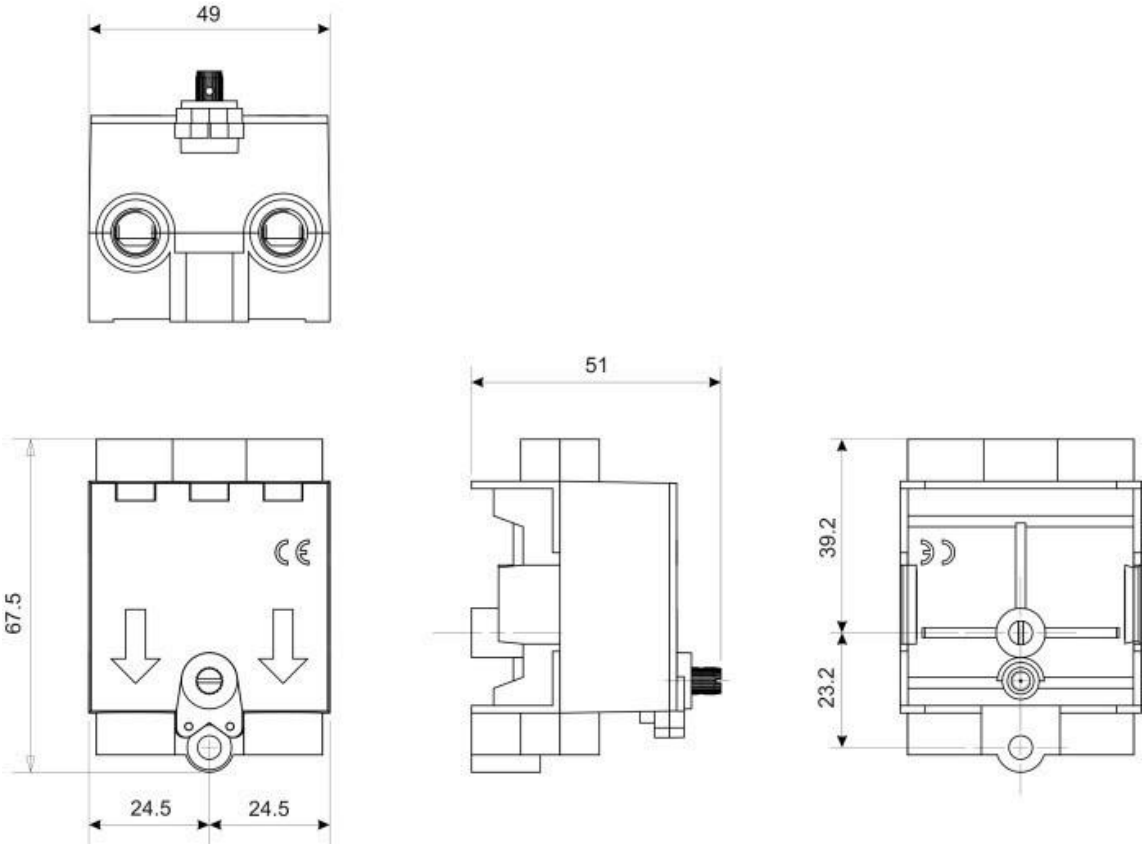

Construction

- Body and cover — Polyamide 6
- Terminal block — Electro-tin plated brass
- Terminal pinching screws — Brass

Performance

- Rated voltage — 440V a.c.
- Rated current — 100A
- Supply frequency — 50-60Hz
- Flammability rating — UL94 V2 (self-extinguishing 30 seconds at 960° C)
- Recommended terminal torque — 3.5Nm

Conformity to Standards

- Conforms to BS 7657:1993
- IP rating to BS EN 60529

Dimensions

- Height 68mm
- Width 49mm
- Depth 42mm
- Fixing centers 23mm

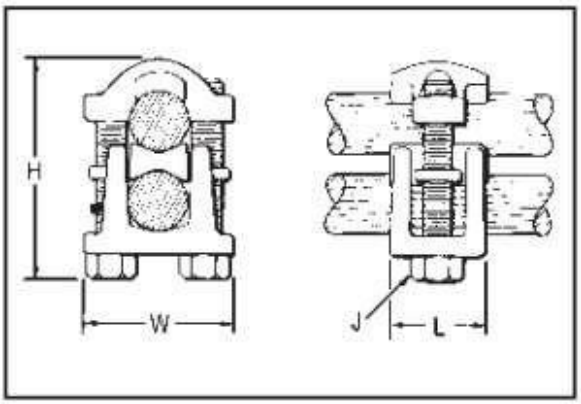

Conductor								H	J	L	W	Recommended Tightening Torque in-lb
Run		Tap		Run		Tap						
Copper & Alum.	ACSR, AAAC, & 5005	Copper & Alum.	ACSR, AAAC, & 5005	Copper Sol., Copperweld Sol.,	Steel Nom. Dia.	Copper Sol., Copperweld Sol.,	Steel Nom. Dia.					
400 - 500 kcmil	336.4 - 397.5	AWG 4 - 500 kcmil	5 - 397.5	—	3/4 - 3/4	#4 - 4/0	7/32 - 3/4	3	1/2	1-1/2	2-1/4	375

- All Combinations of Copper, Aluminum, ACSR, AAAC & 5005
- Compact, high strength, tin plated copper alloy two-piece connector with spacer and tin-plated siliconbronze hardware.
- Recommended for heavy duty connections.
- Spacer separates dissimilar conductors and provides long contact length.
- Neoprene ring prevents loss of shorter bolt during installation.
- Recommended use of oxide inhibitor joint compound for aluminum and ACSR

Conductor A (AWG)				Conductor B (AWG)			
Color	**ACSR**	**Str.**	**Sol.**	**Color**	**ACSR**	**Str.**	**Sol.**
Orange	#4 (6/1, 7/1)	-	#2	Blue	#6 (6/1)	-	#4

- Constructed from aluminum for high conductivity
- Solid center barrier
- Must prefilled with oxide inhibitor to prevent oxidation and keep out moisture.
- Must comply with ANSI C119.4 when properly installed on aluminum-to-aluminum or aluminum-to-copper conductors

Cross Flat	L	W	Conductor					Recommended Tightening Torque in.-lb
			Run		Tap		Maximum Conductor Steel	
			Copper & Aluminum	ACSR,AAAC,5005	Copper & Aluminum	ACSR,AAAC,5005	Sol. 3 Str. Nom.BWG BWG Dia.	
0.74	1.25	0.84	10 Sol.– 2 Sol.	6(6-1) – 4(7-1)	10 Sol.– 2 Sol.	6(6-1) – 4(7-1)	4 6 1/4	275

- Tin-plated, high strength, copper alloy split bolt with spacer
- Recommend to use oxide inhibitor with Aluminum and ACSR.

Cross Flat	L	W	Conductor					Recommended Tightening Torque in.-lb
			Run		Tap		Maximum Conductor	
							Steel	
			Copper & Aluminum	ACSR,AAAC,5005	Copper & Aluminum	ACSR,AAAC,5005	Sol. 3 Str. Nom.BWG BWG Dia.	
1.69	2.88	1.36	1/0 Str.-350 kcmil.	3/0 (6-1) – 4/0 (6-1)	4Str. - 350.	4(6-1) – 4/0(6-1)	- - 5/8	650

4.20 CS033

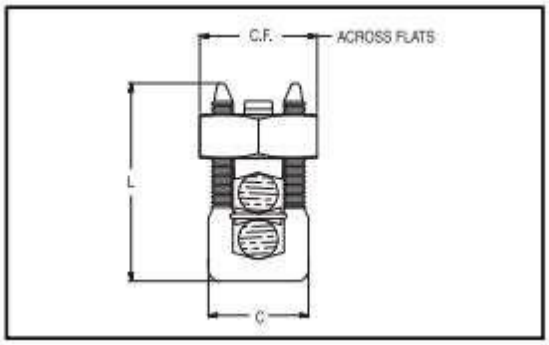

- Tin-plated, high strength, copper alloy split bolt with spacer
- Recommend to use oxide inhibitor with Aluminum and ACSR.

4.21 CS034, CS035, CS036 and CS037

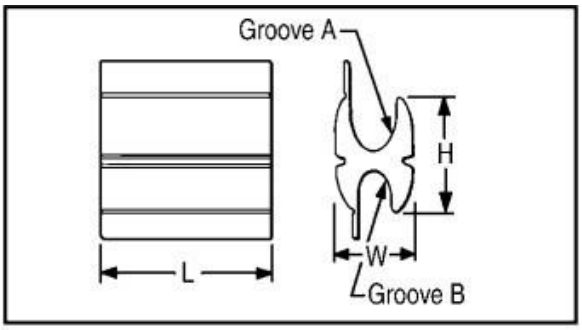

Item #	Groove A (Run)				Groove B (Tap)				Dimensions			Die Index
	Wire Diameter Range	Sol.	Str.	ACSR	Wire Diameter Range	Sol.	Str.	ACSR	H	L	W	
CS034	0.162 - 0.332	#6-#1	#6-#1; 7Str.	#6-#2	0.162 - 0.332	#6-#1	#6-#1;7Str.	#6-#2	1.12	1.25	0.70	O
CS035	0.522 – 0.815		4/0 - 500	4/0 – 477 (18/1)	0.160 - 0.450	#6 – 3/0	#6 – 2/0	#6 – 2/0	2.00	1.62	1.28	N
CS036	0.573 – 0.815		250-500	266-477 (18/1)	0.410-0.505	3/0-300	2/0-4/0	2/0-4/0	1.96	2.00	1.28	N
CS037	0.260-0.419	#1-2/0	#3-2/0	#3-1/0	0.162-0.332	#6-1/0	#6 - #1 (19 str.)	#6 - #2	1.12	1.50	0.70	O

- Materials: Aluminum

Must be prefilled with oxide inhibitor joint compound and strip sealed to limit oxide growth and increase life ofthe connection

4.22 CS038

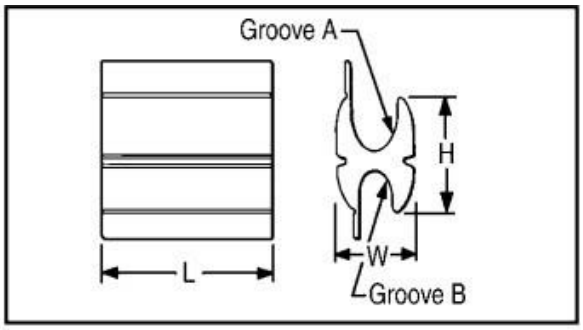

Groove	Standard Conductor			Compact Conductor		Wire Diameter Range		Die	Indents		
	ACSR & Aluminum Alloy	Aluminum or Copper				Max	Min				
		Stranded	Solid	ACSR	Stranded	(in.)			O	WH	Length
A	#6,4,3,2	#6,4,3,2,1	#6,4,3,2,1,1/0	#6,4,3,2,1	#6,4,3,2,1	0.332	0.162	0	4	2	1-1/2”
B	#6,4,3,2	#6,4,3,2,1	#6,4,3,2,1,1/0	#6,4,3,2,1	#6,4,3,2,1	0.332	0.162				

- Materials: Aluminum

Must be prefilled with oxide inhibitor joint compound and strip sealed to limit oxide growth and increase life ofthe connection

Cross Flats	L	W	Alum. to Alum., Alum. to Copper, Copper to Copper Conductors						Recommended Tightening Torque in-lb
			Max. Run to Max. Tap		Min. Run to Min. Tap		Max. Run to Min. Tap		
1.49	2.54	1.13	#4/0 Str. (.528)	#4/0 Str. (.528)	#2 Str. Compact (.268)	#6 Str. (.184)	#4/0 Str. (.528)	#6 Str. (.184)	500

4.23 CS039

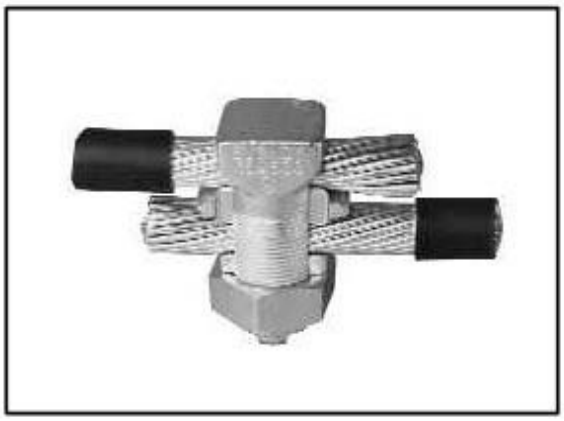

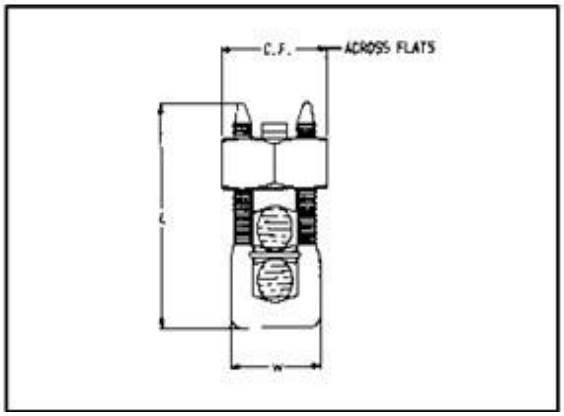

- Tin-plated, high strength, copper alloy split bolt with spacer
- Recommend to use oxide inhibitor with Aluminum and ACSR.

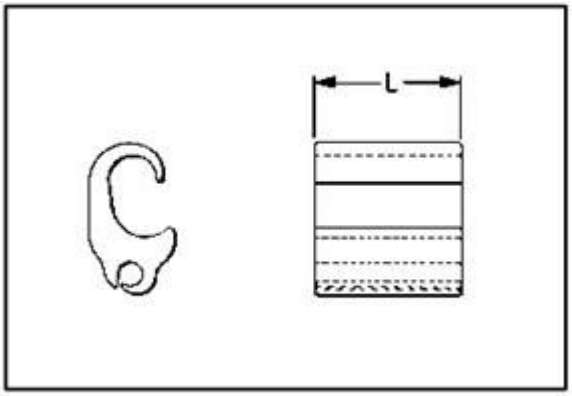

Run		Tap		L	Die Index
Aluminum & Copper	ACSR, 5005	Aluminum & Copper	ACSR, 5005		
250 (37) - 400 (37)	266.8 (18-1) - 397.5 (18-1)	250 (37) - 400 (37)	266.8 (18-1) - 397.5 (18-1)	8-7/8	N

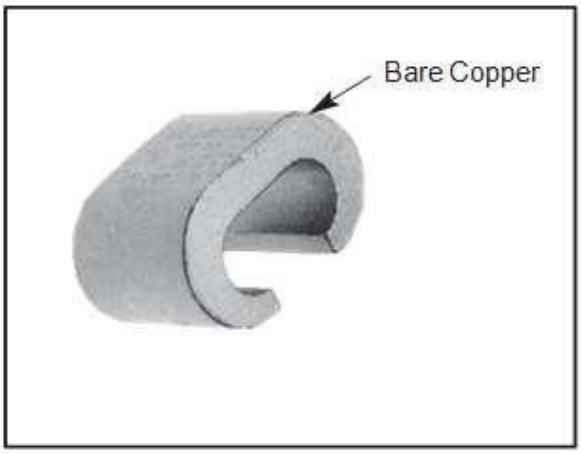

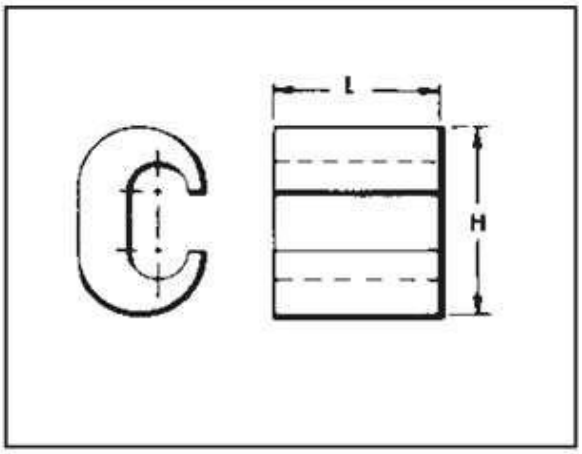

Item #	Run	Tap	L	Die Index
41	3/0 Sol. – 4/0 Str	6 Sol. – 2 Str.	1-1/16	F or D3

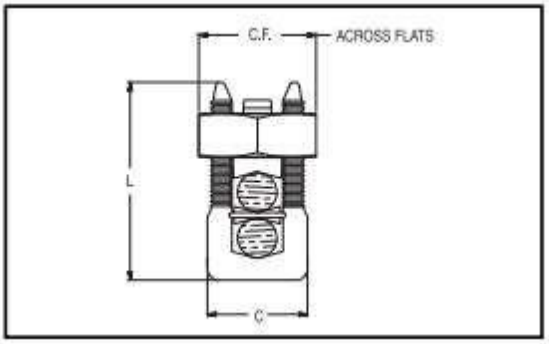

Cross Flat	L	W	Conductor					Recommended Tightening Torque in.-lb
			Run		Tap		Maximum Conductor Steel	
			Copper & Aluminum	ACSR,AAAC,5005	Copper & Aluminum	ACSR,AAAC,5005	Sol. 3 Str. Nom.BWG BWG Dia.	
1.38	2.34	1.58	1 STR.-3/0 Str.	1(6-1) – 2/0(6-1)	8Str.– 3/0 Str.	8(6-1) – 2/0(6-1)	- - 1/2	500

- Tin-plated, high strength, copper alloy split bolt with spacer
- Recommend to use oxide inhibitor with Aluminum and ACSR.

4.27 CS043

Item #	Groove A (Run)				Groove B (Tap)				Dimensions			Die Index
	Wire Diameter Range	Sol.	Str.	ACSR	Wire Diameter Range	Sol.	Str.	ACSR	H	L	W	
43	0.475 - 0.563	250 - 300	4/0	3/0 -4/0	0.162 - 0.332	#6 -1/0	#6-#1,19Str.	#6-#2	1.47	1.62	0.89	D3
44	0.461 – 0.563	250 - 300	3/0 – 4/0	3/0 – 4/0	0.461 – 0.563	250 - 300	3/0 – 4/0	3/0 – 4/0	1.49	2.5	0.89	D3
48	0.162 – 0.398	#6 – 2/0	#6 – 1/0	#6 – 1/0	0.162 – 0.332	#6 – 1/0	#6 - #1 (19 Str.)	#6 - #2	1.15	1.62	0.70	O

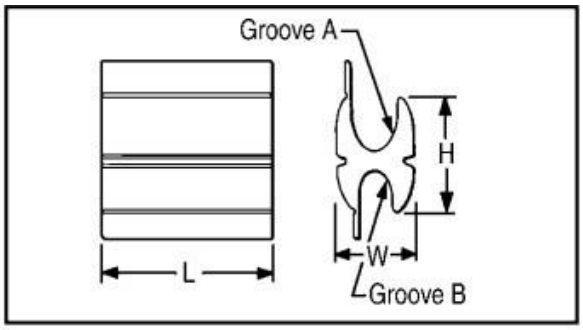

- Materials: Aluminum

Must be prefilled with oxide inhibitor joint compound and strip sealed to limit oxide growth and increase life ofthe connection

Conductor								H	J	L	W	Recommended Tightening Torque in-lb
Run		Tap		Run		Tap						
Copper & Alum.	ACSR, AAAC, & 5005	Copper & Alum.	ACSR, AAAC, & 5005	Copper Sol., Copperweld Sol.,	Steel Nom. Dia.	Copper Sol., Copperweld Sol.,	Steel Nom. Dia.					
1/0 Str. - 4/0 Str.	1/0 - 4/0	6 Str. - 4/0 Str.	6 - 4/0	2/0 - 4/0	3/8 - 1/2	#6 - 4/0	5/32 - 1/2	2-3/8	3/8	1-1/8	1-3/4	250

4.28 CS045

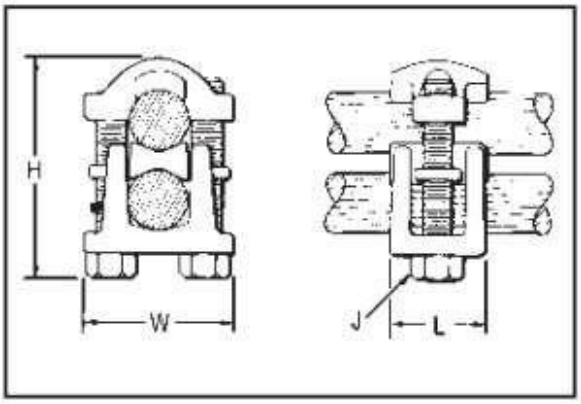

- All Combinations of Copper, Aluminum, ACSR, AAAC & 5005
- Compact, high strength, tin plated copper alloy two-piece connector with spacer and tin-plated siliconbronze hardware.
- Recommended for heavy duty connections.
- Spacer separates dissimilar conductors and provides long contact length.
- Neoprene ring prevents loss of shorter bolt during installation.
- Recommended use of oxide inhibitor joint compound for aluminum and ACSR

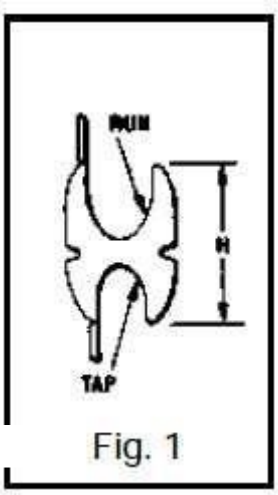

Fig. 1

ACCOMMODATES ③						HEIGHT	LENGTH	WIDTH	▲ DIE INDEX
COPPER OR ALUMINUM		COMPACT ④		DIA. RANGE					
RUN	TAP	RUN	TAP	RUN	TAP				
4/0-1 Str	2/0-1 Str	250-1/0	3/0-1/0	.563-.338	.477-.338	1.42 (36.1)	2.50 (63.5)	.89 (22.6)	D3

- Made of 1350 aluminum alloy for high strength and high conductivity.
- Must be prefilled with oxide inhibitor.
- Must complies with ANSI C119.4 specifications

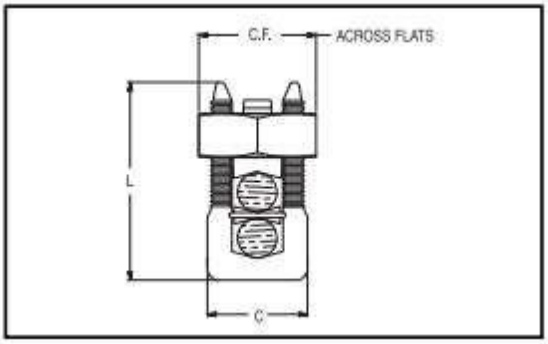

Cross Flat	L	W	Conductor					Recommended Tightening Torque in.-lb
			Run		Tap		Maximum Conductor Steel	
			Copper & Aluminum	ACSR,AAAC,5005	Copper & Aluminum	ACSR,AAAC,5005	Sol. 3 Str. Nom.BWG BWG Dia.	
0.93	1.77	1.06	2 STR.-1/0 Str.	3(6-1) – 1(6-1)	10Str.– 1/0 Str.	6(6-1) – 1(6-1)	- - 3/8	385

- Tin-plated, high strength, copper alloy split bolt with spacer
- Recommend to use oxide inhibitor with Aluminum and ACSR.

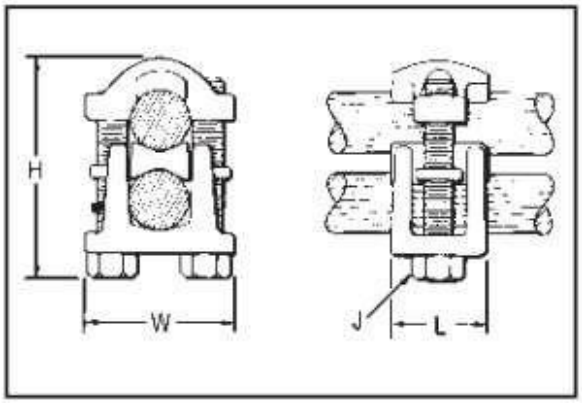

Conductor								H	J	L	W	Recommended Tightening Torque in-lb
Run		Tap		Run		Tap						
Copper & Alum.	ACSR, AAAC, & 5005	Copper & Alum.	ACSR, AAAC, & 5005	Copper Sol., Copperweld Sol.,	Steel Nom. Dia.	Copper Sol., Copperweld Sol.,	Steel Nom. Dia.					
2 Str. - 2/0 Str.	3 - 2/0	6 Str. - 2/0 Str.	6 - 2/0	1 - 3/0	5/16 - 7/16	#6 - 3/0	3/16 - 7/16	2	5/16	1	1-1/2	180

- All Combinations of Copper, Aluminum, ACSR, AAAC & 5005
- Compact, high strength, tin plated copper alloy two-piece connector with spacer and tin-plated siliconbronze hardware.
- Recommended for heavy duty connections.
- Spacer separates dissimilar conductors and provides long contact length.
- Neoprene ring prevents loss of shorter bolt during installation.
- Recommended use of oxide inhibitor joint compound for aluminum and ACSR

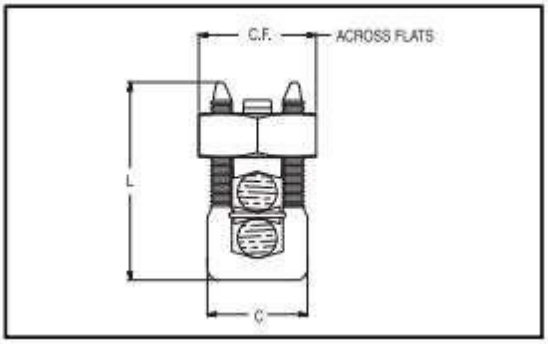

Cross Flat	L	W	Conductor					Recommended Tightening Torque in.-lb
			Run		Tap		Maximum Conductor Steel	
			Copper & Aluminum	ACSR,AAAC,5005	Copper & Aluminum	ACSR,AAAC,5005	Sol. 3 Str. Nom.BWG BWG Dia.	
1.38	2.50	1.58	1 STR.-250	3/0(6-1) – 4/0(6-1)	8Str.– 250	6(6-1) – 4/0(6-1)	- - 1/2	650

- Material – Copper (Tin Plated)
- Includes spacer to separates dissimilar conductors

4.34 CS053

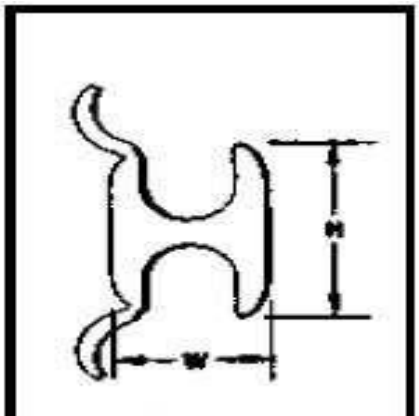

Fig. 3

ACCOMMODATES ③						HEIGHT	LENGTH	WIDTH	▲ DIE INDEX
COPPER OR ALUMINUM		COMPACT ④		DIA. RANGE					
RUN	TAP	RUN	TAP	RUN	TAP				
500-4/0	2/0-6 Str	500-250	3/0-6 Str.	0.815-0.522	0.450-0.160	1.96(50)	2.00 (51)	1.28 (32.5)	N

- Rated up to 35kV
- To make both parallel and tap compression connections.
- Material – Aluminum
- Must be pre-filled with oxide inhibitor.

4.35 CS055, CS056, CS057 and CS067

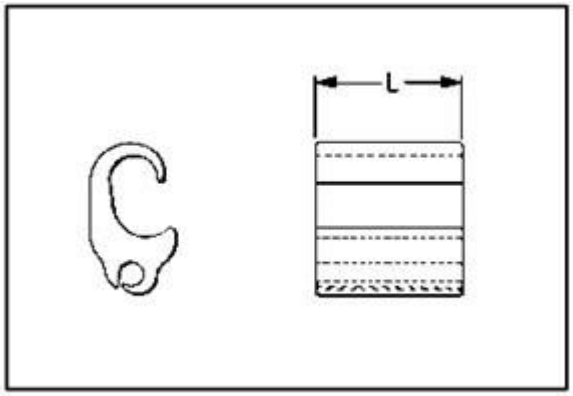

Item #	Run		Tap		L	Die Index
	Aluminum & Copper	ASCR	Aluminum & Copper	ASCR		
CS055	3/0, 4/0 Str. & 4/0, 250, 266.8 Alum.	3/0 - 4/0 & 4/0, 266.8 (18/1) ACSR	3/0 - 4/0 Str. & 4/0 Alum. Compressed	3/0 & 4/0 ACSR	2-3/4	D3
CS056	250 (37) – 477 (37)	266.8 (18-1) – 397 (18-1)	2/0 (19) – 4/0 (19)	2/0 – 4/0	8-7/8	N
CS057	397.5 (19) – 600 (61)	336.5 (26-7) – 556.5 (18-1)	397.5 (19) – 600 (61)	397.5 (26-7) – 556.5 (18-1)	6-3/4	Z
CS067	250 (37) – 477 (37)	266.8 (18-1) – 397 (18-1)	6 Sol. – 2/0 (19)	6 – 1/0	2-1/8	N

- Material – Aluminum
- Must be pre-filled with oxide inhibitor

4.36 CS058

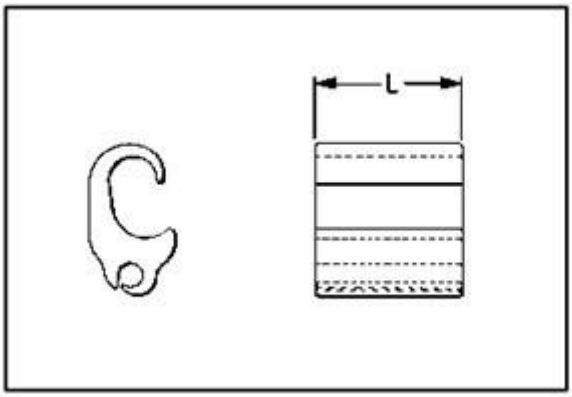

Run		Tap		L	Die Index
Aluminum	**ACSR,6201, 5005**	**Aluminum**	**ACSR,6201,5005**		
4 Sol. - 4 Str.	4	6 – 1 Str.	6 Sol. - 2/0 Str.	1-7/8	D*

- Material – Aluminum
- Used on primary and secondary service drop
- Must be prefilled with oxide inhibitor

4.37 CS060 and CS072

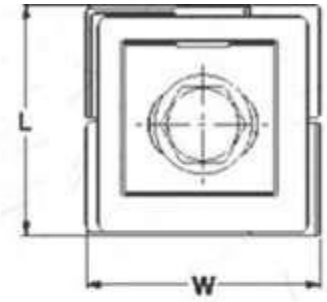

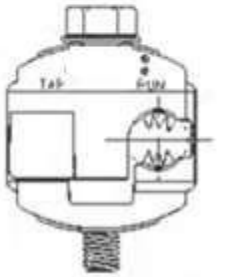

Typical View Showing Breakaway Tab

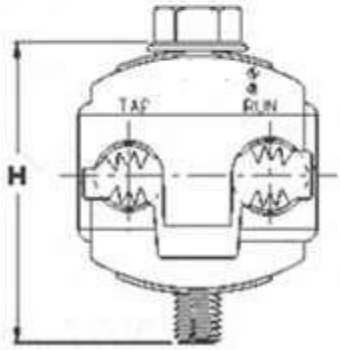

Item #	Conductor		Bolt Size	Socket Size	H	L	W	Recommended Tightening Torque	Max Voltage Rating
	Run	Tap							
CS060	4/0 – 1/0 AWG	1/0 – 6 AWG	5/16	1/2	2.50	2.12	2.00	250	600V
CS072		4/0 – 1/0 AWG							

- Insulation piercing capability eliminates the need for insulation stripping
- UL486B Listed, AL9CU Rated, for copper and aluminum conductor combinations up to 90°C, 600 Voltapplication
- Insulation piercing design for use on hot-line applications eliminates the need for taping
- Easy snap-out tabs eases installation and protects connection from dirt and debris
- Simple bolt-on connection for ease of installation

RUS Accepted

Material (Sleeve)	Conductor	Length	Die Index
Steel	266.8 (18-1)	4-1/8”	240
Alum.		19-3/4”	251

- Two-piece full tension connectors.
- Consist of Aluminum on the outer sleeve and steel inner sleeve
- Must fill with oxide inhibitor

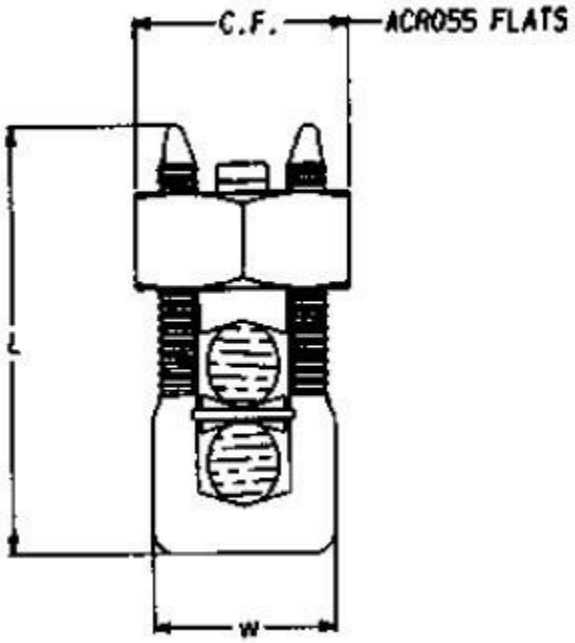

Cross Flats	L	W	Alum. to Alum., Alum. to Copper, Copper to Copper Conductors						Recommended ▲ Tightening Torque in-lb
			Max. Run to Max. Tap		Min. Run to Min. Tap		Max. Run to Min. Tap		
1.00	1.92	.75	#1/0 Str. (.373)	#1/0 Str. (.373)	#2 Str. Compact (.268)	#8 Sol. (.129)	#1/0 Str. (.373)	#8 Sol. (.129)	385

- Facilitate aluminum to aluminum, aluminum to copper and copper to copper conductor.
- Material – Aluminum Alloy Tin Plated

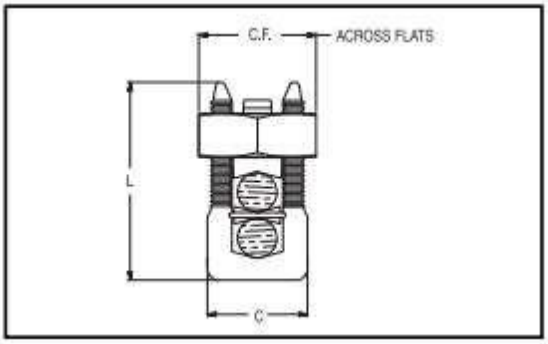

Cross Flat	L	W	Conductor					Recommended Tightening Torque in.-lb
			Run		Tap		Maximum Conductor Steel	
			Copper & Aluminum	ACSR,AAAC,5005	Copper & Aluminum	ACSR,AAAC,5005	Sol. 3 Str. Nom.BWG BWG Dia.	
1.69	2.88	1.91	4/0 Str. - 350	3/0(6-1) – 4/0(6-1)	4Str.– 350	4(6-1) – 4/0(6-1)	- - 5/8	650

- Tin-plated, high strength, copper alloy split bolt with spacer
- Recommend to use oxide inhibitor with Aluminum and ACSR.

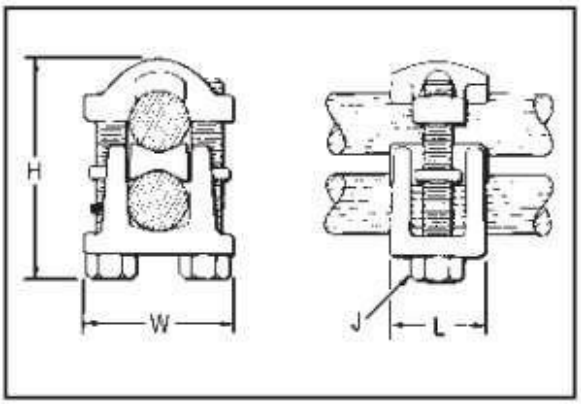

Conductor								H	J	L	W	Recommended Tightening Torque in-lb
Run		Tap		Run		Tap						
Copper & Alum.	ACSR, AAAC, & 5005	Copper & Alum.	ACSR, AAAC, & 5005	Copper Sol., Copperweld Sol.,	Steel Nom. Dia.	Copper Sol., Copperweld Sol.,	Steel Nom. Dia.					
250 - 350 kcmil	4/0 - 300	AWG 6 - 350 kcmil	6 - 300	—	9/16 - 5/8	#6 - 4/0	3/16 - 5/8	2-5/8	1/2	1-3/8	2-1/8	325

- Material – Tin plated copper alloy.
- Two-piece connector with spacer and tin-plated silicon bronze.
- Used in heavy duty connection

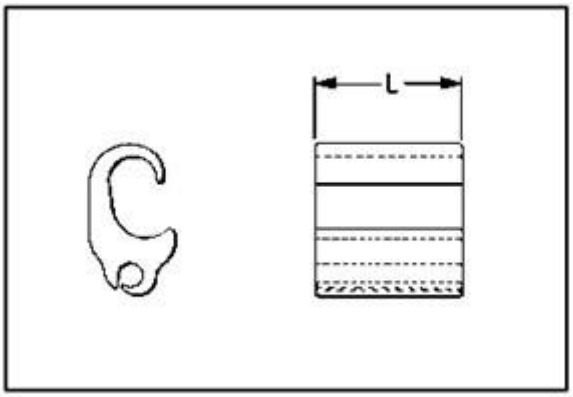

Run		Tap		L	Die Index
Aluminum	**ACSR,6201, 5005**	**Aluminum**	**ACSR,6201,5005**		
300 - 400	266.8 (6-7) - 336.4 (30-7)	6 - 1/0	6 Sol. - 2/0 Str.	2-1/8	R

- Material – Aluminum
- Used on primary and secondary service drop
- Must be prefilled with oxide inhibitor

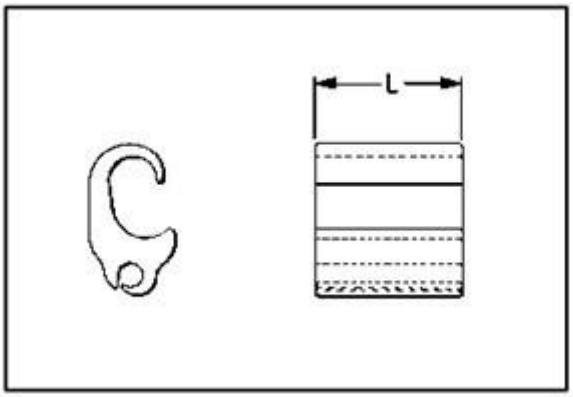

Run		Tap		L	Die Index
Aluminum	**ACSR,6201, 5005**	**Aluminum**	**ACSR,6201,5005**		
1/0 Str. - 4/0 Str.	1/0 - 4/0	6 - 1/0	6 Sol. - 2/0 Str.	2-1/8	H

- Material – Aluminum
- Used on primary and secondary service drop
- Must be prefilled with oxide inhibitor

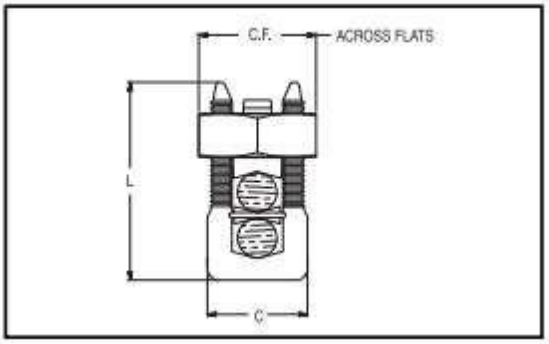

Cross Flat	L	W	Conductor					Recommended Tightening Torque in.-lb
			Run		Tap		Maximum Conductor Steel	
			Copper & Aluminum	ACSR,AAAC,5005	Copper & Aluminum	ACSR,AAAC,5005	Sol. 3 Str. Nom.BWG BWG Dia.	
0.81	1.48	0.94	8 Str. – 2 Str.	3(6-1) – 2(6-1)	8 Sol. – 2 Str.	6(6-1) – 2(6-1)	- 4 5/16	275

- Tin-plated, high strength, copper alloy split bolt with spacer
- Recommend to use oxide inhibitor with Aluminum and ACSR.

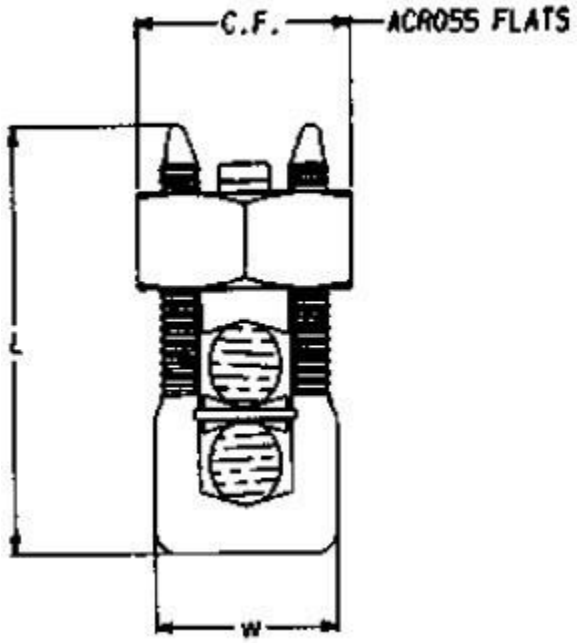

Cross Flat	L	W	Conductor						
			Run				Steel		
			Copper & Aluminum	ACSR AAAC	Copper & Aluminum	ACSR AAAC	Sol. BWG	3 Str. BWG	NOM. Dia.
0.93	1.77	0.70	2 Str. – 1/0 Str.	3(6-1) – 1(6-1)	10Str. – 1/0 Str.	696-1) – 1(6-1)	-	-	3/8

- Facilitate aluminum to aluminum, aluminum to copper and copper to copper conductor.
- Material – Aluminum Alloy Tin Plated

Conductor	L	Die Index	Tools, Die Sets Cat#, & (number of Crimps)					
			MD7, MD6	Y35, Y750,	Y45	Y46	Y48B	Y60BHU
266.8 (7,19)	8-5/8	251	-	U251 (7)	U Die with adapter PT-6515	U Die with adapter PUADP-1.	-	-

- Full Tension Sleeve for All Aluminum Compressed and Compact Conductors.
- Must be pre-filled with oxide inhibitor joint compound and capped

Conductor A (AWG)						Conductor B (AWG)					
Color	**ACSR**	**Str.**	**Sol.**	**Diameter (in.)**		**Color**	**ACSR**	**Str.**	**Sol.**	**Diameter (in.)**	
				Max.	**Min.**					**Max.**	**Min.**
Yellow	1/0	1/0	-	0.398	0.368	Green	-	#8	#6	0.162	0.144

Constructed from aluminum for high conductivity

- Solid center barriers and large chamfers for easy cable insertion
- Tough stabilized nylon sleeves resist installing-tool pressure and provide reliable 600V insulation
- Must be prefilled with oxide inhibitor to prevent oxidation and keep out moisture
- All splices shall be color coded and marked with strip lengths, installation die codes and compressionlocations, providing easy identification for easy installation
- Comply with ANSI C119.4 when properly installed on aluminum-to-aluminum or aluminum-to copperconductors
- RUS accepted

Conductor A (AWG)				Conductor B (AWG)			
Color	**ACSR**	**Str.**	**Sol.**	**Color**	**ACSR**	**Str.**	**Sol.**
Yellow	1/0 (6/1)	1/0	#1	Orange	#4 (6/1, 7/1)	-	#2

- Constructed from aluminum for high conductivity
- Solid center barrier
- Must prefilled with oxide inhibitor to prevent oxidation and keep out moisture.
- Must comply with ANSI C119.4 when properly installed on aluminum-to-aluminum or aluminum-to-copper conductors

4.49 CS077

Conductor A (AWG)				Conductor B (AWG)			
Color	**ACSR**	**Str.**	**Sol.**	**Color**	**ACSR**	**Str.**	**Sol.**
Yellow	1/0 (6/1)	1/0	#1	Yellow	1/10(6/1)	1/0	-

- Constructed from aluminum for high conductivity
- Solid center barrier
- Must prefilled with oxide inhibitor to prevent oxidation and keep out moisture.
- Must comply with ANSI C119.4 when properly installed on aluminum-to-aluminum or aluminum-to-copper conductors

Conductor A (AWG)				Conductor B (AWG)			
Color	**ACSR**	**Str.**	**Sol.**	**Color**	**ACSR**	**Str.**	**Sol.**
Yellow	1/0 (6/1)	1/0	#1	Red	#2 (6/1, 7/1)	#1 & #2	#1

- Constructed from aluminum for high conductivity
- Solid center barrier
- Must prefilled with oxide inhibitor to prevent oxidation and keep out moisture.
- Must comply with ANSI C119.4 when properly installed on aluminum-to-aluminum or aluminum-to-copper conductors

4.51 CS079

Conductor A (AWG)				Conductor B (AWG)			
Color	**ACSR**	**Str.**	**Sol.**	**Color**	**ACSR**	**Str.**	**Sol.**
Red	#2 (6/1, 7/1)	#1 & #2	#1	Red	#2 (6/1, 7/1)	#1 & #2	#1

- Constructed from aluminum for high conductivity
- Solid center barrier
- Must prefilled with oxide inhibitor to prevent oxidation and keep out moisture.
- Must comply with ANSI C119.4 when properly installed on aluminum-to-aluminum or aluminum-to-copper conductors

Conductor A (AWG)				Conductor B (AWG)			
Color	**ACSR**	**Str.**	**Sol.**	**Color**	**ACSR**	**Str.**	**Sol.**
Red	#2 (6/1, 7/1)	#1 & #2	#1	Green	-	#8	#6

- Constructed from aluminum for high conductivity
- Solid center barrier
- Must prefilled with oxide inhibitor to prevent oxidation and keep out moisture.
- Must comply with ANSI C119.4 when properly installed on aluminum-to-aluminum or aluminum-to-copper conductors

4.53 CS081

Conductor A (AWG)				Conductor B (AWG)			
Color	**ACSR**	**Str.**	**Sol.**	**Color**	**ACSR**	**Str.**	**Sol.**
Orange	#4 (6/1, 7/1)	-	#2	Blue	#6 (6/1)	-	#4

- Constructed from aluminum for high conductivity
- Solid center barrier
- Must prefilled with oxide inhibitor to prevent oxidation and keep out moisture.
- Must comply with ANSI C119.4 when properly installed on aluminum-to-aluminum or aluminum-to-copper conductors

Conductor A (AWG)				Conductor B (AWG)			
Color	**ACSR**	**Str.**	**Sol.**	**Color**	**ACSR**	**Str.**	**Sol.**
Yellow	1/0 (6/1)	1/0	#1	Blue	#6 (6/1)	-	#4

- Constructed from aluminum for high conductivity
- Solid center barrier
- Must prefilled with oxide inhibitor to prevent oxidation and keep out moisture.
- Must comply with ANSI C119.4 when properly installed on aluminum-to-aluminum or aluminum-to-copper conductors

4.5285 CS083

Conductor A (AWG)						Conductor B (AWG)					
Color	**ACSR**	**Str.**	**Sol.**	**Diameter (in.)**		**Color**	**ACSR**	**Str.**	**Sol.**	**Diameter (in.)**	
				Max.	**Min.**					**Max.**	**Min.**
Orange	#4	#4	#2	0.258	0.213	Blue	#6	#6	#4	0.204	0.184

Constructed from aluminum for high conductivity

- Solid center barriers and large chamfers for easy cable insertion
- Tough stabilized nylon sleeves resist installing-tool pressure and provide reliable 600V insulation
- Must be prefilled with oxide inhibitor to prevent oxidation and keep out moisture
- All splices shall be color coded and marked with strip lengths, installation die codes and compressionlocations, providing easy identification for easy installation
- Comply with ANSI C119.4 when properly installed on aluminum-to-aluminum or aluminum-to copperconductors
- RUS accepted

Conductor A (AWG)				Conductor B (AWG)			
Color	**ACSR**	**Str.**	**Sol.**	**Color**	**ACSR**	**Str.**	**Sol.**
Red	#2 (6/1, 7/1)	#1 & #2	#1	Blue	#6 (6/1)	-	#4

- Constructed from aluminum for high conductivity
- Solid center barrier
- Must prefilled with oxide inhibitor to prevent oxidation and keep out moisture.
- Must comply with ANSI C119.4 when properly installed on aluminum-to-aluminum or aluminum-to-copper conductors

4.5287 CS085

Conductor A: AL or CU						Conductor B: AL or CU					
Color	ACSR	Str.	Sol.	Diameter (in.)		Color	ACSR	Str.	Sol.	Diameter (in.)	
				Max	Min					Max	Min
Red	#2	#1 & #2	-	0.328	0.268	Brown	#8	#10	-	0.128	0.114

Constructed from aluminum for high conductivity

- Solid center barriers and large chamfers for easy cable insertion
- Tough stabilized nylon sleeves resist installing-tool pressure and provide reliable 600V insulation
- Must be prefilled with oxide inhibitor to prevent oxidation and keep out moisture
- All splices shall be color coded and marked with strip lengths, installation die codes and compressionlocations, providing easy identification for easy installation
- Comply with ANSI C119.4 when properly installed on aluminum-to-aluminum or aluminum-to copperconductors
- RUS accepted

Conductor A (AWG)				Conductor B (AWG)			
Color	**ACSR**	**Str.**	**Sol.**	**Color**	**ACSR**	**Str.**	**Sol.**
Yellow	1/0 (6/1)	1/0	#1	Green	-	#8	#6

- Constructed from aluminum for high conductivity
- Solid center barrier
- Must prefilled with oxide inhibitor to prevent oxidation and keep out moisture.
- Must comply with ANSI C119.4 when properly installed on aluminum-to-aluminum or aluminum-to-copper conductors

4.59 CS087

Conductor A (AWG)				Conductor B (AWG)			
Color	**ACSR**	**Str.**	**Sol.**	**Color**	**ACSR**	**Str.**	**Sol.**
Red	#2 (6/1, 7/1)	#1 & #2	#1	Brown	-	#10	#8

- Constructed from aluminum for high conductivity
- Solid center barrier
- Must prefilled with oxide inhibitor to prevent oxidation and keep out moisture.
- Must comply with ANSI C119.4 when properly installed on aluminum-to-aluminum or aluminum-to-copper conductors

4.60 CS088

Conductor A (AWG)				Conductor B (AWG)			
Color	**ACSR**	**Str.**	**Sol.**	**Color**	**ACSR**	**Str.**	**Sol.**
Orange	#4 (6/1, 7/1)	-	#2	Green	-	#8	#6

- Constructed from aluminum for high conductivity
- Solid center barrier
- Must prefilled with oxide inhibitor to prevent oxidation and keep out moisture.
- Must comply with ANSI C119.4 when properly installed on aluminum-to-aluminum or aluminum-to-copper conductors

4.61 CS090

Conductor A (AWG)						Conductor B (AWG)					
Color	**ACSR**	**Str.**	**Sol.**	**Diameter (in.)**		**Color**	**ACSR**	**Str.**	**Sol.**	**Diameter (in.)**	
				Max.	**Min.**					**Max.**	**Min.**
Orange	#4	#4	#2	0.258	0.213	Green	-	#8	#6	0.162	0.144

Constructed from aluminum for high conductivity

- Solid center barriers and large chamfers for easy cable insertion
- Tough stabilized nylon sleeves resist installing-tool pressure and provide reliable 600V insulation
- Must be prefilled with oxide inhibitor to prevent oxidation and keep out moisture
- All splices shall be color coded and marked with strip lengths, installation die codes and compressionlocations, providing easy identification for easy installation
- Comply with ANSI C119.4 when properly installed on aluminum-to-aluminum or aluminum-to copperconductors
- RUS accepted

Conductor A (AWG)						Conductor B (AWG)					
Color	**ACSR**	**Str.**	**Sol.**	**Diameter (in.)**		**Color**	**ACSR**	**Str.**	**Sol.**	**Diameter (in.)**	
				Max.	**Min.**					**Max.**	**Min.**
Orange	#4	#4	#2	0.258	0.213	Orange	#4	#4	#2	0.258	0.213

Constructed from aluminum for high conductivity

- Solid center barriers and large chamfers for easy cable insertion
- Tough stabilized nylon sleeves resist installing-tool pressure and provide reliable 600V insulation
- Must be prefilled with oxide inhibitor to prevent oxidation and keep out moisture
- All splices shall be color coded and marked with strip lengths, installation die codes and compressionlocations, providing easy identification for easy installation
- Comply with ANSI C119.4 when properly installed on aluminum-to-aluminum or aluminum-to copperconductors
- RUS accepted

Conductor A (AWG)						Conductor B (AWG)					
Color	**ACSR**	**Str.**	**Sol.**	**Diameter (in.)**		**Color**	**ACSR**	**Str.**	**Sol.**	**Diameter (in.)**	
				Max.	**Min.**					**Max.**	**Min.**
Red	#2	#1 & #2	-	0.328	0.268	Green	-	#8	#6	0.162	0.144

Constructed from aluminum for high conductivity

- Solid center barriers and large chamfers for easy cable insertion
- Tough stabilized nylon sleeves resist installing-tool pressure and provide reliable 600V insulation
- Must be prefilled with oxide inhibitor to prevent oxidation and keep out moisture
- All splices shall be color coded and marked with strip lengths, installation die codes and compressionlocations, providing easy identification for easy installation
- Comply with ANSI C119.4 when properly installed on aluminum-to-aluminum or aluminum-to copperconductors
- RUS accepted

Conductor A (AWG)						Conductor B (AWG)					
Color	**ACSR**	**Str.**	**Sol.**	**Diameter (in.)**		**Color**	**ACSR**	**Str.**	**Sol.**	**Diameter (in.)**	
				Max.	**Min.**					**Max.**	**Min.**
Yellow	1/0	1/0	-	0.398	0.368	Orange	#4	#4	#2	0.258	0.213

Constructed from aluminum for high conductivity

- Solid center barriers and large chamfers for easy cable insertion
- Tough stabilized nylon sleeves resist installing-tool pressure and provide reliable 600V insulation
- Must be prefilled with oxide inhibitor to prevent oxidation and keep out moisture
- All splices shall be color coded and marked with strip lengths, installation die codes and compressionlocations, providing easy identification for easy installation
- Comply with ANSI C119.4 when properly installed on aluminum-to-aluminum or aluminum-to copperconductors
- RUS accepted

Conductor A (AWG)						Conductor B (AWG)					
Color	**ACSR**	**Str.**	**Sol.**	**Diameter (in.)**		**Color**	**ACSR**	**Str.**	**Sol.**	**Diameter (in.)**	
				Max.	**Min.**					**Max.**	**Min.**
Yellow	1/0	1/0	-	0.398	0.368	Blue	#6	#6	#4	0.204	0.184

Constructed from aluminum for high conductivity

- Solid center barriers and large chamfers for easy cable insertion
- Tough stabilized nylon sleeves resist installing-tool pressure and provide reliable 600V insulation
- Must be prefilled with oxide inhibitor to prevent oxidation and keep out moisture
- All splices shall be color coded and marked with strip lengths, installation die codes and compressionlocations, providing easy identification for easy installation
- Comply with ANSI C119.4 when properly installed on aluminum-to-aluminum or aluminum-to copperconductors
- RUS accepted

Conductor A (AWG)						Conductor B (AWG)					
Color	**ACSR**	**Str.**	**Sol.**	**Diameter (in.)**		**Color**	**ACSR**	**Str.**	**Sol.**	**Diameter (in.)**	
				Max.	**Min.**					**Max.**	**Min.**
Yellow	1/0	1/0	-	0.398	0.368	Red	#2	#1 & #2	-	0.328	0.268

Constructed from aluminum for high conductivity

- Solid center barriers and large chamfers for easy cable insertion
- Tough stabilized nylon sleeves resist installing-tool pressure and provide reliable 600V insulation
- Must be prefilled with oxide inhibitor to prevent oxidation and keep out moisture
- All splices shall be color coded and marked with strip lengths, installation die codes and compressionlocations, providing easy identification for easy installation
- Comply with ANSI C119.4 when properly installed on aluminum-to-aluminum or aluminum-to copperconductors
- RUS accepted

Conductor	L	Die Index	Tools, Die Sets Cat#, & (number of Crimps)					
			MD7, MD6	Y35, Y750,	Y45	Y46	Y48B	Y60BHU
477 (19)	12-3/4	317	-	U317 (9)	U Die with adapter PT-6515	U Die with adapter PUADP-1.	C317 (3)	L317 (3)

- Full Tension Sleeve for All Aluminum Compressed and Compact Conductors.
- Must be pre-filled with oxide inhibitor joint compound and capped

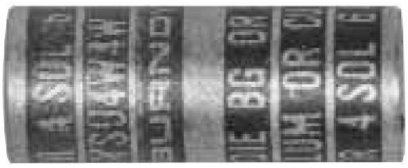

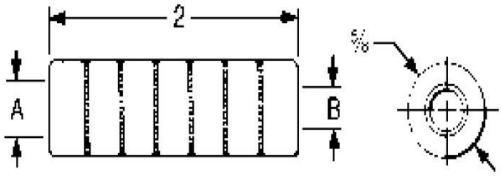

Side A			Side B			Die Index	Tools, Die Set Catalog Number, & (Crimps per End)
ACSR	**Aluminum & Copper**	**Color Code**	**ACSR**	**Aluminum & Copper**	**Color Code**		
2	2 Str. 1 Str. #1 Al Compt #2 Al Compt	Red	4	3, 4 Str. 2 Sol.	Orange	BG or 5/8	**HYTOOL** **Tool / Die / (Crimps per End)** OH25 (1) MD6, MD7 (3) MD6, MD7 W-BG (1) OUR840 X-NBG (1) **HYPRESS** **Tool / Die / (Crimps per End)** Y35 U-BG (1) Y750

- Service Entrance Sleeve for Combination of Copper, Aluminum and ACSR Compressed.
- Heavy-walled aluminum tubing with solid barrier minimizes galvanic corrosion of conductors.
- Must be pre-filled with oxide inhibitor joint compound and strip sealed

Conductor	L	Die Index	Tools, Die Sets Cat#, & (number of Crimps)					
			MD7, MD6	Y35, Y750,	Y45	Y46	Y48B	Y60BHU
1/0 (7)	7-1/4	BG or 243	BG (12) or W243 (6)	BG (3) or U243 (3)	U Die with adapter PT-6515	U Die with adapter PUADP-1.	-	-

- Full Tension Sleeve for All Aluminum Compressed and Compact Conductors.
- Must be pre-filled with oxide inhibitor joint compound and capped

Conductor	L	Die Index	Tools, Die Sets Cat#, & (number of Crimps)					
			MD7, MD6	Y35, Y750,	Y45	Y46	Y48B	Y60BHU
6 Sol.	3	161	W161 (2)	U161 (1)	U Die with adapter PT-6515	U Die with adapter PUADP-1.	-	-

- Full Tension Sleeve for All Aluminum Compressed and Compact Conductors.
- Must be pre-filled with oxide inhibitor joint compound and capped

Conductor	L	Die Index	Tools, Die Sets Cat#, & (number of Crimps)					
			MD7, MD6	Y35, Y750,	Y45	Y46	Y48B	Y60BHU
4/0 (7, 19)	10-1/2	249	W249 (12)	U249	U Die with adapter PT-6515	U Die with adapter PUADP-1.	C249 (3)	L249 (3)

- Full Tension Sleeve for All Aluminum Compressed and Compact Conductors.
- Must be pre-filled with oxide inhibitor joint compound and capped

Conductor	L	Die Index	Tools, Die Sets Cat#, & (number of Crimps)					
			MD7, MD6	Y35, Y750,	Y45	Y46	Y48B	Y60BHU
336.4 (19, 37)	9-7/8	321	-	U321 (8)	U Die with adapter PT-6515	U Die with adapter PUADP-1.	C321 (4)	L321 (4)

- Full Tension Sleeve for All Aluminum Compressed and Compact Conductors.
- Must be pre-filled with oxide inhibitor joint compound and capped

Technical Specification for Transmission & Distribution Connectors & Sleeve:

4.7302 CS102

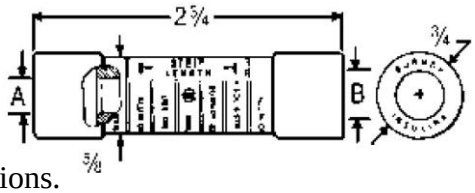

- Use in overhead distribution applications.
- Service Entrance Sleeve for Insulated Combinations of Copper, Aluminum, ACSR

Side A			Side B			Die Index	Tools, Die Set Catalog Number, & (Crimps per End)
ACSR	Aluminum & Copper	Color Code	ACSR	Aluminum & Copper	Color Code		
1/0, 1	1/0 Str. 1-19 Str.	Yellow	1/0, 1	1/0 Str.	Yellow	BG or 5/8	HYTOOL Tool / Die / (Crimps per End) OH25 / (1) MD6, MD7 / (3) MD6, MD7 / W-BG / (1) OUR840 / X-NBG / (1) HYPRESS Tool / Die / (Crimps per End) Y35 / U-BG / (1) Y750

Compressed.

- Polyethylene caps prevent dirt from accumulating in barrel, grip cable for easy two-hand installation,and seal out moisture.
- Aluminum connector is anchored to jacket, assuring the connector is under the die when crimping.
- Nylon jacket insulates connector electrically and protects against water and weather.
- Must pre-filled with oxide inhibitor joint compound.
- Not to be use on bare conductors.

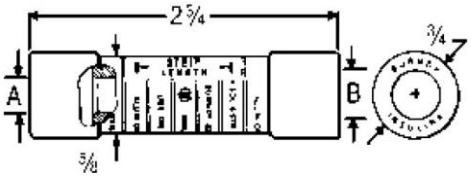

Technical Specification for Transmission & Distribution Connectors & Sleeve: Draft 1

4.7302 CS103

- Use in overhead distribution applications.
- Service Entrance Sleeve for Insulated Combinations of Copper, Aluminum, ACSR Compressed.

Side A			Side B			Die Index	Tools, Die Set Catalog Number, & (Crimps per End)
ACSR	Aluminum & Copper	Color Code	ACSR	Aluminum & Copper	Color Code		
1/0, 1	1/0 Str. 1-19 Str.	Yellow	4	3, 4 Str. 2 Sol.	Orange	BG or 5/8	HYTOOL Tool / Die / (Crimps per End) OH25 / (1) MD6, MD7 / (3) MD6, MD7 / W-BG / (1) OUR840 / X-NBG / (1) HYPRESS Tool / Die / (Crimps per End) Y35 / U-BG / (1) Y750

- Polyethylene caps prevent dirt from accumulating in barrel, grip cable for easy two-hand installation,and seal out moisture.
- Aluminum connector is anchored to jacket, assuring the connector is under the die when crimping.
- Nylon jacket insulates connector electrically and protects against water and weather.
- Must pre-filled with oxide inhibitor joint compound.
- Not to be use on bare conductors.

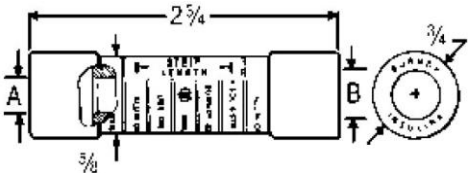

Side A			Side B			Die Index	Tools, Die Set Catalog Number, & (Crimps per End)
ACSR	**Aluminum & Copper**	**Color Code**	**ACSR**	**Aluminum & Copper**	**Color Code**		
2	1 Str. 2 Str. #1 AL Compt #2 AL Compt	Red	-	10 Str. 8 Sol.	Brown	BG or 5/8	**HYTOOL** **Tool / Die / (Crimps per End)** OH25 (1) MD6, MD7 (3) MD6, MD7 W-BG (1) OUR840 X-NBG (1) **HYPRESS** **Tool / Die / (Crimps per End)** Y35 U-BG (1) Y750

- Use in overhead distribution applications.
- Service Entrance Sleeve for Insulated Combinations of Copper, Aluminum, ACSR Compressed.
- Polyethylene caps prevent dirt from accumulating in barrel, grip cable for easy two-hand installation,and seal out moisture.
- Aluminum connector is anchored to jacket, assuring the connector is under the die when crimping.
- Nylon jacket insulates connector electrically and protects against water and weather.
- Must pre-filled with oxide inhibitor joint compound.
- Not to be use on bare conductors.

Side A			Side B			Die Index	Tools, Die Set Catalog Number, & (Crimps per End)
ACSR	**Aluminum & Copper**	**Color Code**	**ACSR**	**Aluminum & Copper**	**Color Code**		
4	3, 4 Str. 2 Sol.	Orange	-	10 Str. 8 Sol.	Brown	BG or 5/8	**HYTOOL** **Tool / Die / (Crimps per End)** OH25 (1) MD6, MD7 (3) MD6, MD7 W-BG (1) OUR840 X-NBG (1) **HYPRESS** **Tool / Die / (Crimps per End)** Y35 U-BG (1) Y750

- Use in overhead distribution applications.
- Service Entrance Sleeve for Insulated Combinations of Copper, Aluminum, ACSR Compressed.
- Polyethylene caps prevent dirt from accumulating in barrel, grip cable for easy two-hand installation,and seal out moisture.
- Aluminum connector is anchored to jacket, assuring the connector is under the die when crimping.
- Nylon jacket insulates connector electrically and protects against water and weather.
- Must pre-filled with oxide inhibitor joint compound.
- Not to be use on bare conductors.

4.7306 CS107

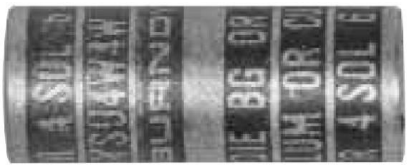

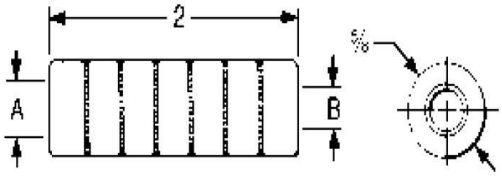

Side A			Side B			Die Index	Tools, Die Set Catalog Number, & (Crimps per End)
ACSR	Aluminum & Copper	Color Code	ACSR	Aluminum & Copper	Color Code		
4	3, 4 Str. 2 Sol.	Orange	-	8 Sol. 10 Str.	Brown	BG or 5/8	HYTOOL Tool / Die / (Crimps per End) OH25 / (1) MD6, MD7 / (3) MD6, MD7 / W-BG / (1) OUR840 / X-NBG / (1) HYPRESS Tool / Die / (Crimps per End) Y35 / U-BG / (1) Y750

- Service Entrance Sleeve for Combination of Copper, Aluminum and ACSR Compressed.
- Heavy-walled aluminum tubing with solid barrier minimizes galvanic corrosion of conductors.
- Must be pre-filled with oxide inhibitor joint compound and strip sealed

4.7307 CS108

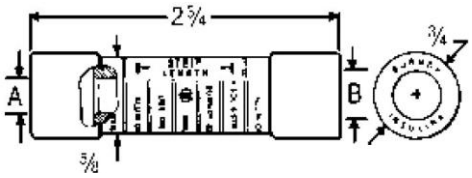

Side A			Side B			Die Index	Tools, Die Set Catalog Number, & (Crimps per End)
ACSR	Aluminum & Copper	Color Code	ACSR	Aluminum & Copper	Color Code		
1/0, 1	1/0 Str. 1-19 Str.	Yellow	2	1 Str. 2 Str. #1 AL Compt #2 AL Compt	Red	BG or 5/8	HYTOOL Tool / Die / (Crimps per End) OH25 / (1) MD6, MD7 / (3) MD6, MD7 / W-BG / (1) OUR840 / X-NBG / (1) HYPRESS Tool / Die / (Crimps per End) Y35 / U-BG / (1) Y750

- Use in overhead distribution applications.
- Service Entrance Sleeve for Insulated Combinations of Copper, Aluminum, ACSR Compressed.
- Polyethylene caps prevent dirt from accumulating in barrel, grip cable for easy two-hand installation,and seal out moisture.
- Aluminum connector is anchored to jacket, assuring the connector is under the die when crimping.
- Nylon jacket insulates connector electrically and protects against water and weather.
- Must pre-filled with oxide inhibitor joint compound.
- Not to be use on bare conductors.

4.7308 CS108

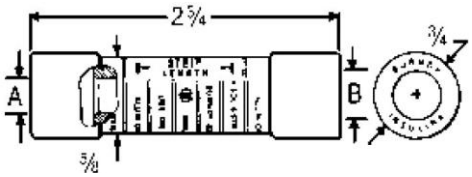

Side A			Side B			Die Index	Tools, Die Set Catalog Number, & (Crimps per End)
ACSR	Aluminum & Copper	Color Code	ACSR	Aluminum & Copper	Color Code		
4	3, 4 Str. 2 Sol.	Orange	6	5, 6 Str. 4 Sol	Blue	BG or 5/8	HYTOOL Tool / Die / (Crimps per End) OH25 / (1) MD6, MD7 / (3) MD6, MD7 / W-BG / (1) OUR840 / X-NBG / (1) HYPRESS Tool / Die / (Crimps per End) Y35 / U-BG / (1) Y750

- Use in overhead distribution applications.
- Service Entrance Sleeve for Insulated Combinations of Copper, Aluminum, ACSR Compressed.
- Polyethylene caps prevent dirt from accumulating in barrel, grip cable for easy two-hand installation,and seal out moisture.
- Aluminum connector is anchored to jacket, assuring the connector is under the die when crimping.
- Nylon jacket insulates connector electrically and protects against water and weather.
- Must pre-filled with oxide inhibitor joint compound.
- Not to be use on bare conductors.

4.80 CS110

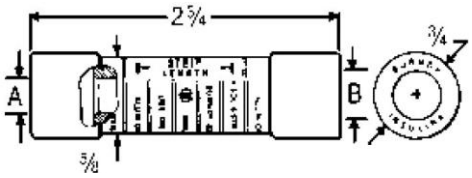

Side A			Side B			Die Index	Tools, Die Set Catalog Number, & (Crimps per End)
ACSR	Aluminum & Copper	Color Code	ACSR	Aluminum & Copper	Color Code		
1/0, 1	1/0 Str. 1-19 Str.	Yellow	6	5, 6 Str. 4 Sol	Blue	BG or 5/8	HYTOOL Tool / Die / (Crimps per End) OH25 (1) MD6, MD7 (3) MD6, MD7 W-BG (1) OUR840 X-NBG (1) HYPRESS Tool / Die / (Crimps per End) Y35 U-BG (1) Y750

- Use in overhead distribution applications.
- Service Entrance Sleeve for Insulated Combinations of Copper, Aluminum, ACSR Compressed.
- Polyethylene caps prevent dirt from accumulating in barrel, grip cable for easy two-hand installation,and seal out moisture.
- Aluminum connector is anchored to jacket, assuring the connector is under the die when crimping.
- Nylon jacket insulates connector electrically and protects against water and weather.
- Must pre-filled with oxide inhibitor joint compound.
- Not to be use on bare conductors.

Technical Specification for Transmission & Distribution Connectors & Sleeve: Draft 1

4.8310 CS111

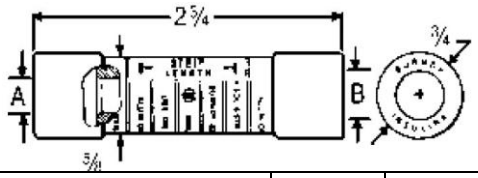

Side A			Side B			Die Index	Tools, Die Set Catalog Number, & (Crimps per End)
ACSR	Aluminum & Copper	Color Code	ACSR	Aluminum & Copper	Color Code		
1/0, 1	1/0 Str. 1-19 Str.	Yellow	-	8 Str. 6 Sol. #8 AL Compt.	Green	BG or 5/8	HYTOOL Tool Die (Crimps per End) OH25 (1) MD6, MD7 (3) MD6, MD7 W-BG (1) OUR840 X-NBG (1) HYPRESS Tool Die (Crimps per End) Y35 U-BG (1) Y750

- Use in overhead distribution applications.
- Service Entrance Sleeve for Insulated Combinations of Copper, Aluminum, ACSR Compressed.
- Polyethylene caps prevent dirt from accumulating in barrel, grip cable for easy two-hand installation,and seal out moisture.
- Aluminum connector is anchored to jacket, assuring the connector is under the die when crimping.
- Nylon jacket insulates connector electrically and protects against water and weather.
- Must pre-filled with oxide inhibitor joint compound.
- Not to be use on bare conductors.

4.8311 CS111

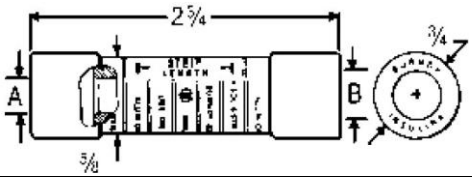

Side A			Side B			Die Index	Tools, Die Set Catalog Number, & (Crimps per End)
ACSR	Aluminum & Copper	Color Code	ACSR	Aluminum & Copper	Color Code		
2	1 Str. 2 Str. #1 AL Compt #2 AL Compt	Red	2	1 Str. 2 Str. #1 AL Compt #2 AL Compt	Red	BG or 5/8	HYTOOL Tool / Die / (Crimps per End) OH25 / (1) MD6, MD7 / (3) MD6, MD7 / W-BG / (1) OUR840 / X-NBG / (1) HYPRESS Tool / Die / (Crimps per End) Y35 / U-BG / (1) Y750

- Use in overhead distribution applications.
- Service Entrance Sleeve for Insulated Combinations of Copper, Aluminum, ACSR Compressed.
- Polyethylene caps prevent dirt from accumulating in barrel, grip cable for easy two-hand installation,and seal out moisture.
- Aluminum connector is anchored to jacket, assuring the connector is under the die when crimping.
- Nylon jacket insulates connector electrically and protects against water and weather.
- Must pre-filled with oxide inhibitor joint compound.
- Not to be use on bare conductors.

4.8312 CS111

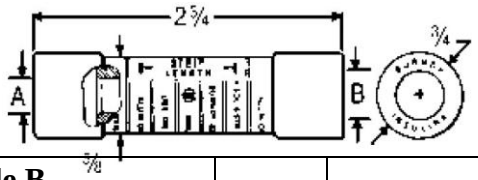

Side A			Side B			Die Index	Tools, Die Set Catalog Number, & (Crimps per End)
ACSR	Aluminum & Copper	Color Code	ACSR	Aluminum & Copper	Color Code		
2	1 Str. 2 Str. #1 AL Compt #2 AL Compt	Red	-	8 Str. 6 Sol. #8 AL Compt.	Green	BG or 5/8	HYTOOL Tool / Die / (Crimps per End) OH25 / (1) MD6, MD7 / (3) MD6, MD7 / W-BG / (1) OUR840 / X-NBG / (1) HYPRESS Tool / Die / (Crimps per End) Y35 / U-BG / (1) Y750

- Use in overhead distribution applications.
- Service Entrance Sleeve for Insulated Combinations of Copper, Aluminum, ACSR Compressed.
- Polyethylene caps prevent dirt from accumulating in barrel, grip cable for easy two-hand installation,and seal out moisture.
- Aluminum connector is anchored to jacket, assuring the connector is under the die when crimping.
- Nylon jacket insulates connector electrically and protects against water and weather.
- Must pre-filled with oxide inhibitor joint compound.
- Not to be use on bare conductors.

4.8313 CS111

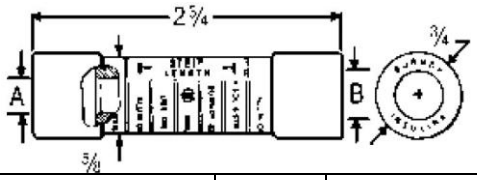

Side A			Side B			Die Index	Tools, Die Set Catalog Number, & (Crimps per End)
ACSR	Aluminum & Copper	Color Code	ACSR	Aluminum & Copper	Color Code		
4	3, 4 Str. 2 Sol.	Orange	4	3, 4 Str. 2 Sol.	Orange	BG or 5/8	HYTOOL Tool / Die / (Crimps per End) OH25 (1) MD6, MD7 (3) MD6, MD7 W-BG (1) OUR840 X-NBG (1) HYPRESS Tool / Die / (Crimps per End) Y35 U-BG (1) Y750

- Use in overhead distribution applications.
- Service Entrance Sleeve for Insulated Combinations of Copper, Aluminum, ACSR Compressed.
- Polyethylene caps prevent dirt from accumulating in barrel, grip cable for easy two-hand installation,and seal out moisture.
- Aluminum connector is anchored to jacket, assuring the connector is under the die when crimping.
- Nylon jacket insulates connector electrically and protects against water and weather.
- Must pre-filled with oxide inhibitor joint compound.
- Not to be use on bare conductors.

4.8314 CS111

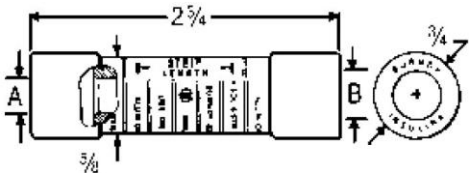

Side A			Side B			Die Index	Tools, Die Set Catalog Number, & (Crimps per End)
ACSR	Aluminum & Copper	Color Code	ACSR	Aluminum & Copper	Color Code		
4	3, 4 Str. 2 Sol.	Orange	-	8 Str. 6 Sol. #8 AL Compt.	Green	BG or 5/8	HYTOOL Tool / Die / (Crimps per End) OH25 / (1) MD6, MD7 / (3) MD6, MD7 / W-BG / (1) OUR840 / X-NBG / (1) HYPRESS Tool / Die / (Crimps per End) Y35 / U-BG / (1) Y750

- Use in overhead distribution applications.
- Service Entrance Sleeve for Insulated Combinations of Copper, Aluminum, ACSR Compressed.
- Polyethylene caps prevent dirt from accumulating in barrel, grip cable for easy two-hand installation,and seal out moisture.
- Aluminum connector is anchored to jacket, assuring the connector is under the die when crimping.
- Nylon jacket insulates connector electrically and protects against water and weather.
- Must pre-filled with oxide inhibitor joint compound.
- Not to be use on bare conductors.

4.8315 CS116

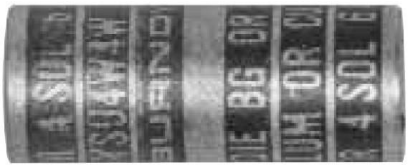

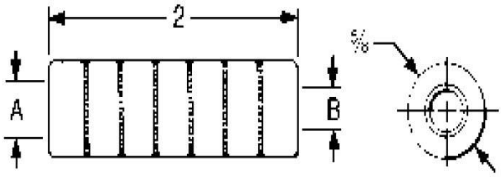

Side A			Side B			Die Index	Tools, Die Set Catalog Number, & (Crimps per End)
ACSR	**Aluminum & Copper**	**Color Code**	**ACSR**	**Aluminum & Copper**	**Color Code**		
1/0	1/0 Str. 2/0 Al Compt 1/0 Al Compt	Yellow	6	5, 6 Str. 4 Sol, #4 AL Compt	Blue	BG or 5/8	**HYTOOL** **Tool / Die / (Crimps per End)** OH25 (1) MD6, MD7 (3) MD6, MD7 W-BG (1) OUR840 X-NBG (1) **HYPRESS** **Tool / Die / (Crimps per End)** Y35 U-BG (1) Y750

- Service Entrance Sleeve for Combination of Copper, Aluminum and ACSR Compressed.
- Heavy-walled aluminum tubing with solid barrier minimizes galvanic corrosion of conductors.
- Must be pre-filled with oxide inhibitor joint compound and strip sealed

4.8316 CS116

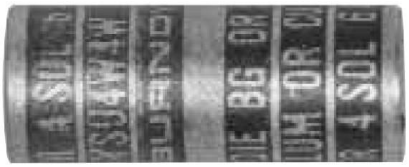

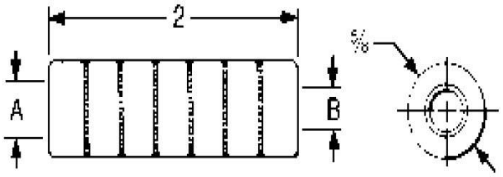

Side A			Side B			Die Index	Tools, Die Set Catalog Number, & (Crimps per End)
ACSR	**Aluminum & Copper**	**Color Code**	**ACSR**	**Aluminum & Copper**	**Color Code**		
1/0	1/0 Str. 2/0 Al Compt 1/0 Al Compt	Yellow	1/0	1/0 Str. 2/0 Al Compt 1/0 Al Compt	Yellow	BG or 5/8	HYTOOL Tool / Die / (Crimps per End) OH25 / (1) MD6, MD7 / (3) MD6, MD7 / W-BG / (1) OUR840 / X-NBG / (1) HYPRESS Tool / Die / (Crimps per End) Y35 / U-BG / (1) Y750

- Service Entrance Sleeve for Combination of Copper, Aluminum and ACSR Compressed.
- Heavy-walled aluminum tubing with solid barrier minimizes galvanic corrosion of conductors.
- Must be pre-filled with oxide inhibitor joint compound and strip sealed

4.8317 CS116

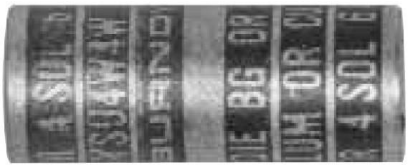

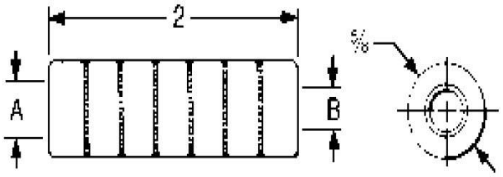

Side A			Side B			Die Index	Tools, Die Set Catalog Number, & (Crimps per End)
ACSR	Aluminum & Copper	Color Code	ACSR	Aluminum & Copper	Color Code		
1/0	1/0 Str. 2/0 Al Compt 1/0 Al Compt	Yellow	4	3, 4 Str. 2 Sol.	Orange	BG or 5/8	HYTOOL Tool / Die / (Crimps per End) OH25 (1) MD6, MD7 (3) MD6, MD7 W-BG (1) OUR840 X-NBG (1) HYPRESS Tool / Die / (Crimps per End) Y35 U-BG (1) Y750

- Service Entrance Sleeve for Combination of Copper, Aluminum and ACSR Compressed.
- Heavy-walled aluminum tubing with solid barrier minimizes galvanic corrosion of conductors.
- Must be pre-filled with oxide inhibitor joint compound and strip sealed

4.8318 CS116

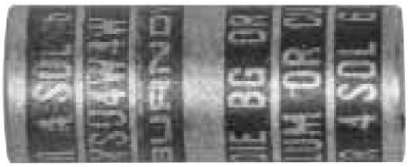

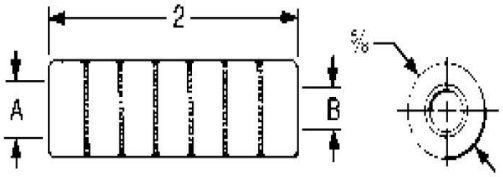

Side A			Side B			Die Index	Tools, Die Set Catalog Number, & (Crimps per End)
ACSR	**Aluminum & Copper**	**Color Code**	**ACSR**	**Aluminum & Copper**	**Color Code**		
1/0	1/0 Str. 2/0 Al Compt 1/0 Al Compt	Yellow	2	2 Str. 1 Str. #1 AL Compt #2 AL Compt	Red	BG or 5/8	HYTOOL Tool / Die / (Crimps per End) OH25 / (1) MD6, MD7 / (3) MD6, MD7 / W-BG / (1) OUR840 / X-NBG / (1) HYPRESS Tool / Die / (Crimps per End) Y35 / U-BG / (1) Y750

-
- Service Entrance Sleeve for Combination of Copper, Aluminum and ACSR Compressed.
- Heavy-walled aluminum tubing with solid barrier minimizes galvanic corrosion of conductors.
- Must be pre-filled with oxide inhibitor joint compound and strip sealed

4.90 CS120

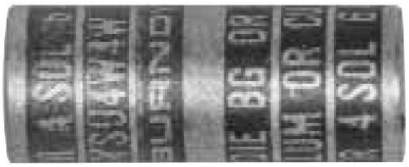

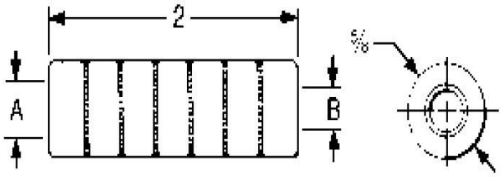

Side A			Side B			Die Index	Tools, Die Set Catalog Number, & (Crimps per End)
ACSR	**Aluminum & Copper**	**Color Code**	**ACSR**	**Aluminum & Copper**	**Color Code**		
1/0	1/0 Str. 2/0 Al Compt 1/0 Al Compt	Yellow	-	8 Str. 6 Sol. #8 AL Compt.	Green	BG or 5/8	HYTOOL Tool / Die / (Crimps per End) OH25 / (1) MD6, MD7 / (3) MD6, MD7 / W-BG / (1) OUR840 / X-NBG / (1) HYPRESS Tool / Die / (Crimps per End) Y35 / U-BG / (1) Y750

- Service Entrance Sleeve for Combination of Copper, Aluminum and ACSR Compressed.
- Heavy-walled aluminum tubing with solid barrier minimizes galvanic corrosion of conductors.
- Must be pre-filled with oxide inhibitor joint compound and strip sealed

4.9320 CS121

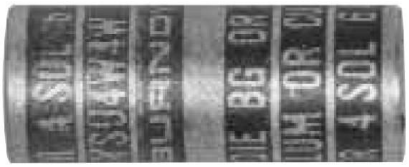

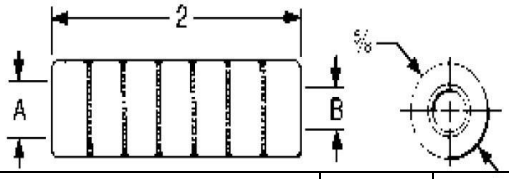

Side A			Side B			Die Index	Tools, Die Set Catalog Number, & (Crimps per End)
ACSR	**Aluminum & Copper**	**Color Code**	**ACSR**	**Aluminum & Copper**	**Color Code**		
2	2 Str. 1 Str. #1 Al Compt #2 Al Compt	Red	-	8 Sol. 10 Str.	Brown	BG or 5/8	**HYTOOL** **Tool / Die / (Crimps per End)** OH25 (1) MD6, MD7 (3) MD6, MD7 W-BG (1) OUR840 X-NBG (1) **HYPRESS** **Tool / Die / (Crimps per End)** Y35 U-BG (1) Y750

- Service Entrance Sleeve for Combination of Copper, Aluminum and ACSR Compressed.
- Heavy-walled aluminum tubing with solid barrier minimizes galvanic corrosion of conductors.
- Must be pre-filled with oxide inhibitor joint compound and strip sealed

4.9321 CS121

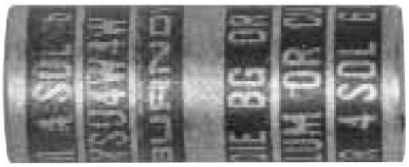

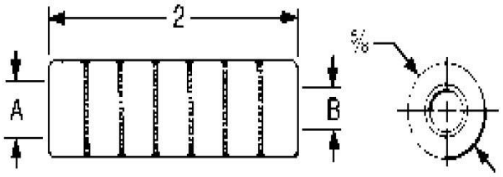

Side A			Side B			Die Index	Tools, Die Set Catalog Number, & (Crimps per End)
ACSR	Aluminum & Copper	Color Code	ACSR	Aluminum & Copper	Color Code		
2	2 Str. 1 Str. #1 Al Compt #2 Al Compt	Red	6	5, 6 Str. 4 Sol, #4 Al Compt	Blue	BG or 5/8	HYTOOL Tool / Die / (Crimps per End) OH25 / (1) MD6, MD7 / (3) MD6, MD7 / W-BG / (1) OUR840 / X-NBG / (1) HYPRESS Tool / Die / (Crimps per End) Y35 / U-BG / (1) Y750

- Service Entrance Sleeve for Combination of Copper, Aluminum and ACSR Compressed.
- Heavy-walled aluminum tubing with solid barrier minimizes galvanic corrosion of conductors.
- Must be pre-filled with oxide inhibitor joint compound and strip sealed

4.9322 CS121

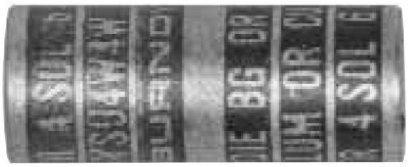

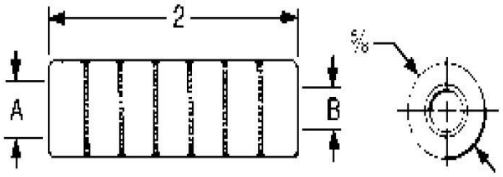

Side A			Side B			Die Index	Tools, Die Set Catalog Number, & (Crimps per End)
ACSR	Aluminum & Copper	Color Code	ACSR	Aluminum & Copper	Color Code		
2	2 Str. 1 Str. #1 Al Compt #2 Al Compt	Red	-	8 Str. 6 Sol. #8 Al Compt.	Green	BG or 5/8	HYTOOL Tool / Die / (Crimps per End) OH25 / (1) MD6, MD7 / (3) MD6, MD7 / W-BG / (1) OUR840 / X-NBG / (1) HYPRESS Tool / Die / (Crimps per End) Y35 / U-BG / (1) Y750

- Service Entrance Sleeve for Combination of Copper, Aluminum and ACSR Compressed.
- Heavy-walled aluminum tubing with solid barrier minimizes galvanic corrosion of conductors.
- Must be pre-filled with oxide inhibitor joint compound and strip sealed

4.9323 CS121

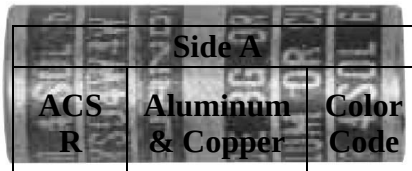

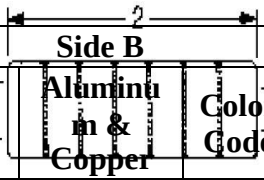

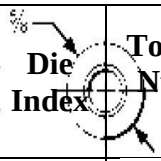

Side A			Side B				
ACSR	**Aluminum & Copper**	**Color Code**	**ACSR**	**Aluminum & Copper**	**Color Code**	**Die Index**	**Tools, Die Set Catalog Number, & (Crimps per End)**
4	3, 4 Str. 2 Sol.	Orange	6	5, 6 Str. 4 Sol, #4 Al Compt	Blue	BG or 5/8	HYTOOL Tool / Die / (Crimps per End) OH25 / (1) MD6, MD7 / (3) MD6, MD7 / W-BG / (1) OUR840 / X-NBG / (1) HYPRESS Tool / Die / (Crimps per End) Y35 / U-BG / (1) Y750

- Service Entrance Sleeve for Combination of Copper, Aluminum and ACSR Compressed.
- Heavy-walled aluminum tubing with solid barrier minimizes galvanic corrosion of conductors.
- Must be pre-filled with oxide inhibitor joint compound and strip sealed

4.9324 CS125

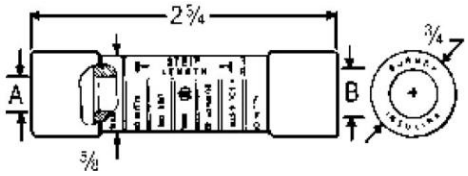

Side A			Side B			Die Index	Tools, Die Set Catalog Number, & (Crimps per End)
ACSR	**Aluminum & Copper**	**Color Code**	**ACSR**	**Aluminum & Copper**	**Color Code**		
2	1 Str. 2 Str. #1 AL Compt #2 AL Compt	Red	4	3, 4 Str. 2 Sol.	Orange	BG or 5/8	HYTOOL Tool / Die / (Crimps per End) OH25 (1) MD6, MD7 (3) MD6, MD7 W-BG (1) OUR840 X-NBG (1) HYPRESS Tool / Die / (Crimps per End) Y35 U-BG (1) Y750

- Use in overhead distribution applications.
- Service Entrance Sleeve for Insulated Combinations of Copper, Aluminum, ACSR Compressed.
- Polyethylene caps prevent dirt from accumulating in barrel, grip cable for easy two-hand installation,and seal out moisture.
- Aluminum connector is anchored to jacket, assuring the connector is under the die when crimping.
- Nylon jacket insulates connector electrically and protects against water and weather.
- Must pre-filled with oxide inhibitor joint compound.
- Not to be use on bare conductors.

4.9325 CS126

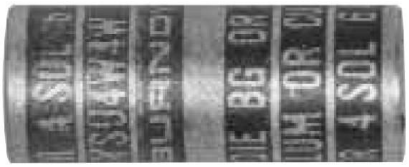

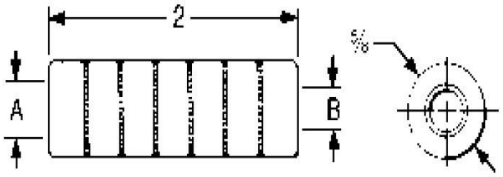

Side A			Side B			Die Index	Tools, Die Set Catalog Number, & (Crimps per End)
ACSR	**Aluminum & Copper**	**Color Code**	**ACSR**	**Aluminum & Copper**	**Color Code**		
2	2 Str. 1 Str. #1 Al Compt #2 Al Compt	Red	2	2 Str. 1 Str. #1 Al Compt #2 Al Compt	Red	BG or 5/8	HYTOOL Tool / Die / (Crimps per End) OH25 / / (1) MD6, MD7 / / (3) MD6, MD7 / W-BG / (1) OUR840 / X-NBG / (1) HYPRESS Tool / Die / (Crimps per End) Y35 / U-BG / (1) Y750

- Service Entrance Sleeve for Combination of Copper, Aluminum and ACSR Compressed.
- Heavy-walled aluminum tubing with solid barrier minimizes galvanic corrosion of conductors.
- Must be pre-filled with oxide inhibitor joint compound and strip sealed

4.9326 CS126

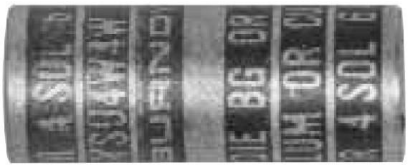

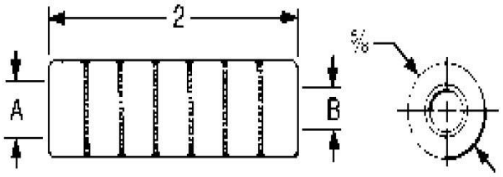

- Service Entrance Sleeve for Combination of Copper, Aluminum and ACSR Compressed.
- Heavy-walled aluminum tubing with solid barrier minimizes galvanic corrosion of conductors.
- Must be pre-filled with oxide inhibitor joint compound and strip sealed

Side A			Side B			Die Index	Tools, Die Set Catalog Number, & (Crimps per End)
ACSR	**Aluminum & Copper**	**Color Code**	**ACSR**	**Aluminum & Copper**	**Color Code**		
4	3, 4 Str. 2 Sol.	Orange	4	3, 4 Str. 2 Sol.	Orange	BG or 5/8	**HYTOOL** **Tool / Die / (Crimps per End)** OH25 (1) MD6, MD7 (3) MD6, MD7 W-BG (1) OUR840 X-NBG (1) **HYPRESS** **Tool / Die / (Crimps per End)** Y35 U-BG (1) Y750

4.9327 CS126

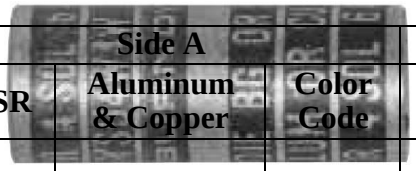

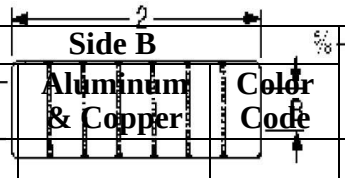

Side A			Side B				
ACSR	**Aluminum & Copper**	**Color Code**	**ACSR**	**Aluminum & Copper**	**Color Code**	**Die Index**	**Tools, Die Set Catalog Number, & (Crimps per End)**
4	3, 4 Str. 2 Sol.	Orange	-	6 Sol. 8 Str. #8 Al Compt.	Green	BG or 5/8	HYTOOL Tool / Die / (Crimps per End) OH25 / (1) MD6, MD7 / (3) MD6, MD7 / W-BG / (1) OUR840 / X-NBG / (1) HYPRESS Tool / Die / (Crimps per End) Y35 / U-BG / (1) Y750

- Service Entrance Sleeve for Combination of Copper, Aluminum and ACSR Compressed.
- Heavy-walled aluminum tubing with solid barrier minimizes galvanic corrosion of conductors.
- Must be pre-filled with oxide inhibitor joint compound and strip sealed

4.9328 CS129

Conductor A (AWG)						Conductor B (AWG)					
Color	ACSR	Str.	Sol.	Diameter (in.)		Color	ACSR	Str.	Sol.	Diameter (in	
				Max.	Min.					Max.	Min
Yellow	1/0	1/0	-	0.398	0.368	Yellow	1/0	1/0	-	0.398	0.36

Constructed from aluminum for high conductivity

- Solid center barriers and large chamfers for easy cable insertion
- Tough stabilized nylon sleeves resist installing-tool pressure and provide reliable 600V insulation
- Must be prefilled with oxide inhibitor to prevent oxidation and keep out moisture
- All splices shall be color coded and marked with strip lengths, installation die codes and compressionlocations, providing easy identification for easy installation
- Comply with ANSI C119.4 when properly installed on aluminum-to-aluminum or aluminum-to copperconductors
- RUS accepted

4.100 CS1329

Conductor A (AWG)						Conductor B (AWG)					
Color	**ACSR**	**Str.**	**Sol.**	**Diameter (in.)**		**Color**	**ACSR**	**Str.**	**Sol.**	**Diameter (in.)**	
				Max.	**Min.**					**Max.**	**Min.**
Red	#2	#1 & #2	-	0.328	0.268	Blue	#6	#6	#4	0.204	0.184

Constructed from aluminum for high conductivity

- Solid center barriers and large chamfers for easy cable insertion
- Tough stabilized nylon sleeves resist installing-tool pressure and provide reliable 600V insulation
- Must be prefilled with oxide inhibitor to prevent oxidation and keep out moisture
- All splices shall be color coded and marked with strip lengths, installation die codes and compressionlocations, providing easy identification for easy installation
- Comply with ANSI C119.4 when properly installed on aluminum-to-aluminum or aluminum-to copperconductors
- RUS accepted

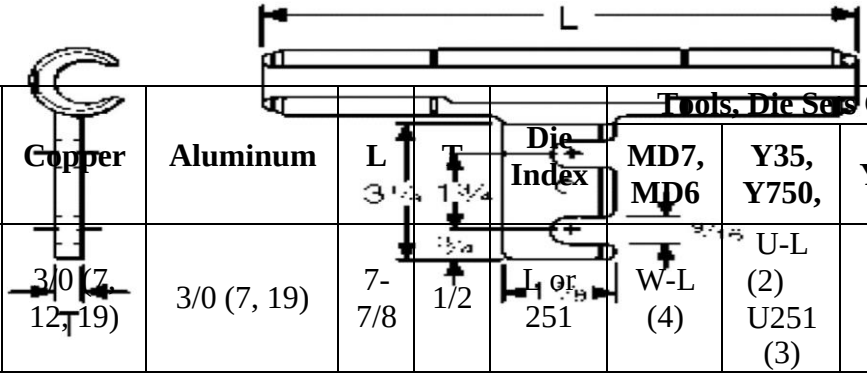

ACSR, 6201, 5005	Copper	Aluminum	L	T	Die Index	Tools, Die Sets Cat#, & (number of Crimps)					
						MD7, MD6	Y35, Y750,	Y45	Y46	Y48B	Y60BH
3/0	3/0 (7, 12, 19)	3/0 (7, 19)	7-7/8	1/2	L or 251	W-L (4)	U-L (2) U251 (3)	-	-	-	-

- Material – Aluminum
- Design for east disconnecting of tap conductor

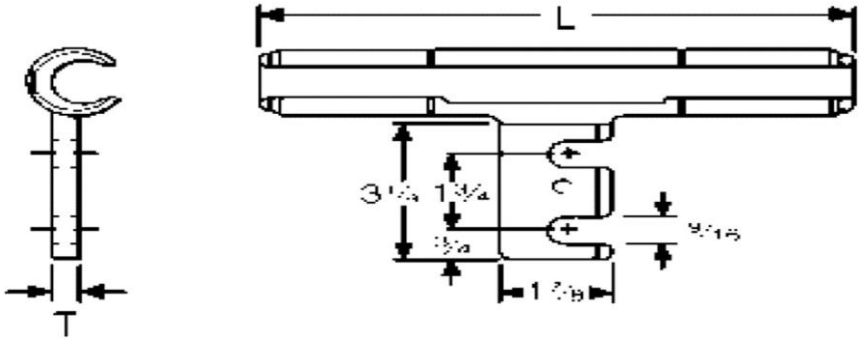

- Material – Aluminum
- Design for east disconnecting of tap conductor

ACSR, 6201, 5005	Copper	Aluminum	L	T	Die Index	Tools, Die Sets Cat#, & (number of Crimps)					
						MD7, MD6	Y35, Y750,	Y45	Y46	Y48B	Y60BHU
4/0	4/0 (7, 12, 19)	4/0 (7, 19)	7-7/8	1/2	L or 251	W-L (4)	U-L (2) U251 (3)	-	-	-	-

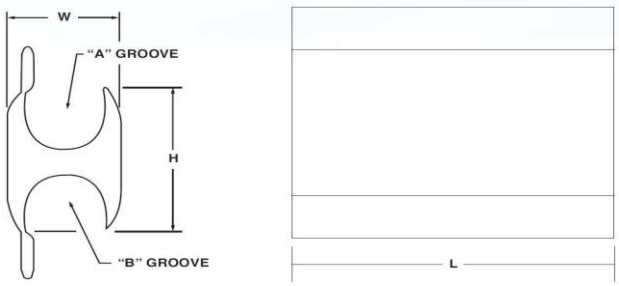

Conductor Range										Diameter (in.)				Connector Length (in.)
Standard Conductor						Compact Conductor								
Main			Tap			Main		Tap		Main		Tap		
ACSR	Str.	Sol.	ACSR	Str.	Sol.	ACSR	Str.	ACSR	Str.	Max.	Min.	Max.	Min.	
2/0, 1/0	3/0, 2/0	4/0, 3/0	#2, #4, #6	#1, #2, #3, #4, #6	1/0, #1, #2, #4, #6	2/0, 1/0, #1, #2	2/0, 1/0, #1, #2	#1, #2, #4, #6	#1, #2, #3, #4, #6	0.470	0.398	0.332	0.162	1 13/16

- Made of 1350 aluminum alloy for high strength and high conductivity.
- Must be prefilled with oxide inhibitor.
- Must complies with ANSI C119.4 specifications

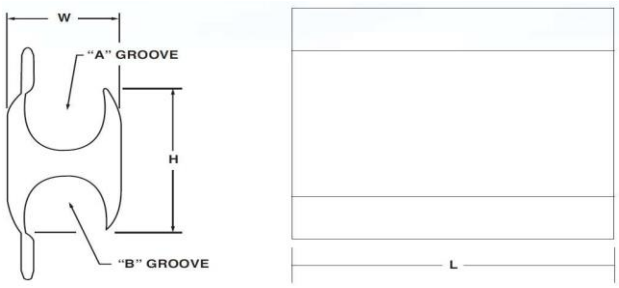

Groove	Standard Conductor			Compressed Conductor		No. of Crimps (HYD.)	Die Size	Approximate Dimension (in.)		
	ACSR & Alumunum Alloy	AL or CU Stranded	AL or CU Solid	ACSR	Stranded			L	W	H
A	300, 336, 397, 477, 556 18/1	336, 350, 397, 400, 450, 477, 500, 550, 556, 600	-	397, 477, 556, 636	477, 500, 556, 636	4	R	4.63	1.75	3.06
B	300, 336, 397, 477, 556 18/1	336, 350, 397, 400, 450, 477, 500, 550, 556, 600	-	397, 477, 556, 636	477, 500, 556, 636					

- Made of 1350 aluminum alloy for high strength and high conductivity.
- Must be prefilled with oxide inhibitor.
- Must complies with ANSI C119.4 specifications

Cross Flat	L	W	Conductor					
			Copper		Copper weld			
			Equal Run & Tap	Min Tap with Max Run	Maximum Run and Tap			
					Sol.	Str.	Type A	Type D
2.31	3.29	1.94	4/0 Str. - 750	4/0 Str.	-	19 #5	-	-

4.105 CS135

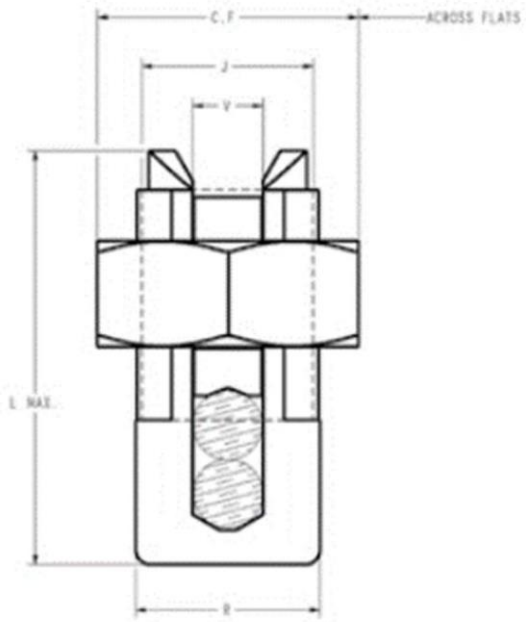

- Material: **Copper, Copper weld**
- Compact, high strength, high copper alloy split-bolt
- Must have free-running threads and easy to grip wrench flats.
- Highly resistant to season cracking and corrosion, the spilt bolt provides maximum pressure and assuresa secure connection on all combinations of run and tap conductors.
- Can accommodates 3 maximum size conductors.

5.0 Submission

5.1 Drawings showing the critical dimensions of the connectors and sleeves offered shall be submitted with thetender

5.2 The bidder shall furnish catalogues, literature, operation, and detailed dimensional drawings of complete bidfor ease of evaluation.

6.0 Quality Assurance

The manufacturer shall be certified in accordance with ISO 9001. The supplier must provide a copy of a validcertificate along with his quote. Relevant manuals shall be presented upon request.

Technical Specifications for Conductors

Bare Overhead AAC Conductors

1.0 Glossary

AAC	*All Aluminum Conductor*
AWG	*American wire gauge*
Bare	*Uninsulated conductor*
GPL	*Guyana Power and Light Incorporated*
Kcmil	*One thousand circular mil, where 1 kcmil = 050667mm^2*

2.0 Scope

This specification covers All Aluminum Conductors (AAC) Bare, which shall be operated on 60Hz GPL's distribution system.

3.0 Standards

Bare overhead AAC conductor must meet or exceed all applicable requirements of the latest editions of the following standards:

- ASTM B-398: Standard Specification for Aluminum Alloy 6201-T81 and 6201-T83 Wirefor Electrical Purposes
- ASTM B-399: Standard Specification for Concentric-Lay-Stranded Aluminum-Alloy 6201-T81 Conductors
- NEMA WC-26: Binational Wire and Cable Packaging Standards
- BS EN 50183: Conductors for Overhead Lines Aluminum-magnesium-silicon alloy wires.
- BS 215 Part 1: Aluminum stranded conductors for overhead power transmission purposes.

4.0 Environmental Conditions

4.1 The conductor to be supplied against this specification shall be suitable for satisfactory continuous operation under the following tropical coastal conditions.

a. Maximum ambient temperature 50 ^{0}C
b. Minimum ambient temperature 15 ^{0}C
c. Relative Humidity 100%
d. Maximum Annual Rainfall 1010mm
e. Maximum altitude above mean sea level 1000m

4.2 The conductor shall be designed and protected for use in exposed, heavily polluted and salty, corrosive and humid tropical coastal atmospheric conditions.

5.0 Conductor Sizes

5.1 The conductor sizes for the AAC conductors are as shown below, along with their respective code names.

a. 7/ 3.12mm (53.5mm2) – Poppy
b. 7/ 4.42mm (107.22mm2) – Oxlip
c. 19/ 3.38mm (170.58mm2) – Tulip
d. 19/ 4.02mm (241.5mm2) – Cosmos

5.2 A tolerance of +1% of the nominal diameter of aluminum or aluminum alloy wires shall be permitted.

5.3 No negative tolerance shall be permitted on the nominal diameter aluminum wire used inthe manufacture of AAC bare conductor.

6.0 Properties of Wires

The proceeding table outlines the required properties of each bare AAC conductor, utilized by GPL Inc.

Code Name	Actual Area	Stranding & wire	Approx. overall	Approx. mass	Calculated resistance	Rated Strength	Current rating

	(mm^2)	dia. (mm)	dia. (mm)	(kg/km)	at 20^{0}C (ohm/km)	(kN)	(Amps)
Poppy	52.5	7/ 3.12	9.35	147.32	0.656	8.852	247
Oxlip	107.22	7/ 4.42	13.26	294.65	0.325	17.037	383
Tulip	170.58	19/ 3.38	16.89	468.77	0.197	27.357	513
Cosmos	241.5	19/ 4.02	20.12	665.21	0.145	37.187	639

7.0 Construction

7.1 There shall be no joint in any wire of a stranded conductor containing seven wires, except those made in the base rod or wire before final drawing.

7.2 For conductors containing more than seven wires, joints in individual wires are permitted in any layer except the outermost layer (in addition to those made in the brass rod or wire before final drawing) but no two such joints shall be less than 15 m apart in the complete stranded conductor.

7.3 Any joint shall be made by resistance or cold pressure butt welding. They are not required to fulfil the mechanical requirement of unjointed wires.

7.4 Joints made by resistance butt welding shall, after welding, be annealed over a distance of at least 200 m on each side of the joint.

7.5 The wires used in the construction of a stranded conductor shall before stranding satisfy all the relevant requirements of this standard. The lay ratio of the different layers shall be withinthe limit shown in the following table.

No. of Wires in Conductors	Lay Ratio in	
	6-wire layer	12-wire layer

	Min.	Max.	Min.	Max.
7	10	14	-	-
9	10	16	10	14

7.6 In all constructions, the successive layers shall have opposite directions of lay, the outer most layer being right-handed. The wires in each layer shall be evenly and closely stranded.

7.7 In all aluminum stranded conductors having multiple layers of wires, the lay ratio of any layer shall not be greater than the lay ratio of the layer immediately beneath it.

8.0 Commissioning

8.1 Certified test reports of Routine/Acceptance tests, are required for all conductors supplied to Guyana Power and Light Inc, and shall be supplied upon delivery, and shall include:

a. Conductor Resistance Test
b. Measurement of lay ratio /direction of lay
c. Wrapping Test
d. Tensile strength
e. Measurement of overall diameter
f. Measurement of individual wires

8.2 Conductors shall be supplied on non-returnable wooden reel/drums. All reels shall be designed to NEMA WC-26 standard or equivalent and are to be constructed to withstand therigors of overseas shipping.

8.3 For wooden drums, preventative treatment, of a quality and amount which is not harmful tothe conductor, shall be applied to the entire drum.

8.4 The wire shall be smooth and free from all imperfections such as spills, splits, slag inclusion,die marks scratches, fittings, blow holes, projections, looseness, overlapping of strands, chipping of aluminum layers etc. and all such other defects which may hamper the mechanical and electrical properties of the conductor. Special care should be taken to keep away dirt, grit etc. during stranding.

9.0 Marking

The following information shall be marked on each package in indelible ink:

a. Manufacturer's name
b. Country of Origin
c. Trademark, if any
d. Drum identification number
e. Code name and size of conductor
f. Length of conductors
g. Gross mass of the package
h. Net mass of conductor
i. Position of the conductor end
j. Consignee name and address

10.0 Storage and Shipping

10.1 Conductor reels should be stored and shipped upright, **NOT** on their side.

10.2 Both cable ends should be sealed to prevent the entrance of moisture, on each reel unit.

10.3 For shipment, each unit shall be securely packaged and wrapped to avoid damage and for safe handling.

11.0 Technical Data Schedule

Conductors: Bare Overhead Aluminum Conductors			
Bidder:			
Item No:			
Code Name:			
#	Description	Unit	Vendor Proposed Values
	Standard		
1	Standard(s) to which conductor is manufactured		
	Conductor Size		
2	Number and diameter or Aluminum Strands	No./ mm	
3	Diameter of steel strands	No. / mm	
4	Total cross sectional area of conductor	mm2	
5	Overall diameter of bare conductor	mm	
	Properties of Wire		
6	Ultimate breaking load of conductor	kg	
7	Rated Tensile Strength	kg	
8	Equivalent modulus of elasticity	kg/mm2	
9	Maximum stress	kg/mm2	
10	Equivalent coefficient of linear expansion per degrees Celsius		
11	Current Rating	Amps	
12	Maximum continuous current carrying capacity of conductor at ambient 50 degrees Celsius	Amps	
13	Conductor Temperature for condition at item 12	degrees Celsius	
14	Short time overload current capacity of conductor at ambient 50oC		
	1hour duration	Amps	
	3 hour duration	Amps	

15	Resistance of conductor per km at 75 degrees Celsius	Ω/km	
16	Maximum DC resistance per kM at 20oC	Ω/km	
17	Maximum AC resistance per km at 80oC	Ω/km	
18	Reactance per KM	Ω/km	
19	Weight of conductor per km		
	Construction		

20	Lay ratio for Aluminium Conductor		
	Min		
	Max		
21	Lay ratio for Steel Conductor		
	Min		
	Max		
	Test Report Checklist		
22	Conductor Resistance Test included	yes/no	
23	Measurement of lay ratio/direction of lay included	yes/no	
24	Wrapping Test included	yes/no	
25	Tensile strength included	yes/no	
26	Measurement of overall diameter included	yes/no	
27	Measurement of individual wires included		
	Packaging and Shipping		
28	Drum Type		
29	Length of conductor	meter	
30	Dimensions of Drum		
31	Gross weight	kg	
32	Net weight	kg	
33	Marking as per specification		

ACSR Conductors

1.0 Glossary

ACSR	*Aluminum Conductor Steel Re-inforced Cable*
AWG	*American wire gauge*
Bare	*Uninsulated conductor*
GPL	*Guyana Power and Light Incorporated*
Lay ratio	*Ratio of the aerial length of a complete turn of the helix formed by an individual wire in a stranded conductor to the external diameter of the helix*

2.0 Scope

This specification covered the detail of Aluminum Conductor Steel Reinforced Conductors (ACSR) Bare Overhead conductors, which shall be used on 60 Hz distribution and transmission network.

3.0 Standards

The ASCR conductors must meet or exceed all applicable requirements of the latest editions ofthe following standards:

- B230 Aluminum: 1350-H19 Wire for Electrical Purposes.
- B232: Concentric-Lay-Stranded Aluminum Conductors, Coated-Steel Reinforced(ACSR).
- B498: Zinc-Coated (Galvanized) Steel Core Wire for Use in Overhead Electrical Conductors.
- B500: Metallic Coated Stranded Steel Core for Use in Overhead Electrical Conductors
- Any other International recognized standards

4.0 Environmental Conditions

4.1 The conductor to be supplied against this specification shall be suitable for satisfactory continuous operation under the following tropical coastal conditions.

a. Maximum ambient temperature 50 ^{0}C
b. Minimum ambient temperature 15 ^{0}C
c. Relative Humidity 100%
d. Maximum Annual Rainfall 1010mm
e. Maximum altitude above mean sea level 1000m

4.2 The conductor shall be designed and protected for use in exposed, heavily polluted and salty, corrosive and humid tropical coastal atmospheric conditions.

5.0 Conductor Sizes

5.1 The conductor sizes for the ACSR conductors are as shown below, along with their respective code names.

- 266.8kcmil (26/7) - Partridge

5.2 A tolerance of +1% of the nominal diameter of aluminum or aluminum alloy wires shall be permitted.

5.3 No negative tolerance shall be permitted on the nominal diameter aluminum wire used inthe manufacture of ACSR bare conductor.

6.0 Properties of Wires

The proceeding table outlines the required properties of each bare ACSR conductor, utilized byGPL Inc.

Code Name	Stranding (Al/Stl)	Approx. overall dia. (ins.)	Content (%) (Al – Stl)	Approx. mass (lb/1000ft)	Calculated resistance at 75^{0}C (ohm/1000ft)	Rated Strength (lbs)	Current rating (Amps)
Partridge	26/7	0.642	68.51 – 31.49	367	0.0779	11300	475

7.0 Construction

7.1 No two joints shall occur in the aluminum wires closer than 15 meters. No joints shall be permitted in galvanized steel wire unless the core consists of seven or more steel wires. In the latter case, joints in individual wires are permitted, but no two such adjacent joints shall be less than 15meters.

7.2 The wires used in the construction of a stranded conductor shall before stranding satisfy all the relevant requirements of this standard. The lay ratio of the different layers shall be withinthe limit given below:

No. of Wire		Lay Ratio for Steel Core		Lay Ratio for outside layer	
Al.	Steel	Max	Min	Max	Min
26	7	28	13	14	10

8.0 Commissioning

8.1 The conductor shall be subjected to routine and acceptance test in accordance with the relevant IEEE/ANSI standards.

8.2 Certified test reports of Routine/Acceptance tests, are required for all conductors supplied to Guyana Power and Light Inc, and shall be supplied upon delivery, and shall include:

a. Conductor Resistance Test
b. Measurement of lay ratio /direction of lay
c. Wrapping Test
d. Tensile strength
e. Measurement of overall diameter
f. Measurement of individual wires

8.3 Conductors shall be supplied on non-returnable wooden reel/drums. All reels shall be designed to NEMA WC-26 standard or equivalent and are to be constructed to withstand therigors of overseas shipping.

8.4 The conductors shall be wound in reels or drums conforming to the latest versions IEEE/ANSI Standards.

8.5 For wooden drums, preventative treatment, of a quality and amount which is not harmful tothe conductor, shall be applied to the entire drum.

8.6 The wire shall be smooth and free from all imperfections such as spills, splits, slag inclusion,die marks scratches, fittings, blow holes, projections, looseness, overlapping of strands, chipping of aluminum layers etc. and all such other defects which may hamper the mechanical and electrical properties of the conductor. Special care should be taken to keep away dirt, grit etc. during stranding.

9.0 Marking

The following information shall be marked on each package in indelible ink:

a. Manufacturer's name
b. Country of Origin
c. Trademark, if any
d. Drum identification number
e. Code name and size of conductor
f. Length of conductors
g. Gross mass of the package
h. Net mass of conductor
i. Position of the conductor end
j. Consignee name and address

10.0 Storage and Shipping

10.1 Conductor reels/drums should be stored and shipped upright, **NOT** on their side.

10.2 Both cable ends should be sealed to prevent the entrance of moisture, on each reel unit.

10.4 For shipment, each unit shall be securely packaged and wrapped to avoid damage and forsafe handling.

11.0 Technical Schedule

Conductors: Bare Overhead Aluminum Conductors			
Bidder:			
Item No:			
Code Name:			
#	Description	Unit	Vendor Proposed Values
	Standard		
1	Standard(s) to which conductor is manufactured		
	Conductor Size		
2	Number and diameter or Aluminum Strands	No./ mm	
3	Diameter of steel strands	No. / mm	
4	Total cross sectional area of conductor	mm2	
5	Overall diameter of bare conductor	mm	
	Properties of Wire		
6	Ultimate breaking load of conductor	kg	
7	Rated Tensile Strength	kg	
8	Equivalent modulus of elasticity	kg/mm2	
9	Maximum stress	kg/mm2	
10	Equivalent coefficient of linear expansion per degrees Celsius		
11	Current Rating	Amps	
12	Maximum continuous current carrying capacity of conductor at ambient 50 degrees Celsius	Amps	
13	Conductor Temperature for condition at item 12	degrees Celsius	
14	Short time overload current capacity of conductor at ambient 50oC		
	1hour duration	Amps	
	3 hour duration	Amps	
15	Resistance of conductor per km at 75 degrees Celsius	Ω/km	
16	Maximum DC resistance per kM at 20oC	Ω/km	

17	Maximum AC resistance per km at 80oC	Ω/km	
18	Reactance per KM	Ω/km	
19	Weight of conductor per km		
	Construction		
20	Lay ratio for Aluminium Conductor		
	Min		
	Max		
21	Lay ratio for Steel Conductor		
	Min		
	Max		
	Test Report Checklist		
22	Conductor Resistance Test included	yes/no	
23	Measurement of lay ratio/direction of lay included	yes/no	
24	Wrapping Test included	yes/no	
25	Tensile strength included	yes/no	
26	Measurement of overall diameter included	yes/no	
27	Measurement of individual wires included		
	Packaging and Shipping		
28	Drum Type		
29	Length of conductor	meter	
30	Dimensions of Drum		
31	Gross weight	kg	
32	Net weight	kg	
33	Marking as per specification		

AAC Covered Conductor

1.0 Glossary

AAC	*All Aluminum Conductor*
AWG	*American wire gauge*
Covered	*Insulated*
GPL	*Guyana Power and Light Incorporated*
Kcmil	*One thousand circular mil, where 1 kcmil = 050667mm^2*

2.0 Scope

This specification covers All Aluminum Conductors (AAC) Covered conductor, which shall be operated on 60 Hz GPL's distribution system.

3.0 Standards

Covered AAC conductor must meet or exceed all applicable requirements of the latest editions ofthe following standards:

- ASTM B 230: Aluminum 1350–H19 Wire for Electrical Purposes
- ASTM B 231: Concentric-Lay-Stranded Aluminum 1350 Conductors
- ASTM B-1248 - Polyethylene Plastics Molding and Extrusion Materials.
- ASTM C-8.35 - Specifications for Weather-Resistant Polyethylene-Covered Wire and Cable.
- ICEA S-70-547: WEATHER-RESISTANT POLYETHYLENE COVERED CONDUCTORS
- NEMA WC-26: Binational Wire and Cable Packaging Standards

4.0 Environmental Conditions

4.1 The conductor to be supplied against this specification shall be suitable for satisfactory continuous operation under the following tropical coastal conditions.

a. Maximum ambient temperature 50 ^{0}C

b. Minimum ambient temperature 15 ^{0}C
c. Relative Humidity 100%
d. Maximum Annual Rainfall 1010mm
e. Maximum altitude above mean sea level 1000m

4.2 The conductor shall be designed and protected for use in exposed, heavily polluted and salty, corrosive and humid tropical coastal atmospheric conditions.

5.0 Conductor Sizes

5.1 The conductor sizes for the covered AAC conductors are as shown below, along with their respective code names.

a. 336.4 kcmil (19 strands) - Anona

5.2 A tolerance of +1% of the nominal diameter of aluminum or aluminum alloy wires shall be permitted.

5.3 No negative tolerance shall be permitted on the nominal diameter aluminum wire used inthe manufacture of AAC covered conductor.

6.0 Properties of Wires

The proceeding table outlines the required properties of each covered AAC conductor, utilizedby GPL Inc.

Conductor size	Stranding (NOS)	Insulation Thickness (mm)	Nominal Dia. (mm)	Approx. mass (kg/km)	Calculated resistance at 20^{0}C (ohm/km)	Rated Strength (kN)	Current rating (Amps)
336.4	19	1.52	18.3	540	0.1686	24.62	495

7.0 Construction

7.1 There shall be no joint in any wire of a stranded conductor containing seven wires, except those made in the base rod or wire before final drawing.

7.2 For conductors containing more than seven wires, joints in individual wires are permitted inany layer except the outermost layer (in addition to those made in the brass rod or wire

before final drawing) but no two such joints shall be less than 15 m apart in the complete stranded conductor.

7.3 Any joint shall be made by resistance or cold pressure butt welding. They are not required to fulfil the mechanical requirement of unjointed wires.

7.4 Joints made by resistance butt welding shall, after welding, be annealed over a distance of at least 200 m on each side of the joint.

7.5 In all constructions, the successive layers shall have opposite directions of lay, the outer most layer being right-handed. The wires in each layer shall be evenly and closely stranded.

7.6 The construction of the conductors must be aluminum alloy 1350-H19, 6201-181, concentrically stranded and covered for weather proofing with polyethylene, high density polyethylene (HD).

8.0 Commissioning

8.1 Certified test reports of Routine/Acceptance tests, are required for all conductors supplied to Guyana Power and Light Inc, and shall be supplied upon delivery, and shall include:

a. Conductor Resistance Test
b. Insulation Resistance Test
c. Measurement of lay ratio /direction of lay
d. Wrapping Test
e. Tensile strength and elongation at break
f. Test for the thickness of insulation and sheath
g. Measurement of overall diameter
h. Measurement of individual wires

8.2 Conductors shall be supplied on non-returnable wooden reel/drums. All reels shall be designed to NEMA WC-26 standard or equivalent and are to be constructed to withstand therigors of overseas shipping.

8.3 For wooden drums, preventative treatment, of a quality and amount which is not harmful tothe conductor, shall be applied to the entire drum.

8.4 The wire shall be smooth and free from all imperfections such as spills, splits, slag inclusion,die marks scratches, fittings, blow holes, projections, looseness, overlapping of strands,

chipping of aluminum layers etc. and all such other defects which may hamper the mechanical and electrical properties of the conductor. Special care should be taken to keepaway dirt, grit etc. during stranding.

9.0 Marking

The following information shall be marked on each package in indelible ink:

a. Manufacturer's name
b. Country of Origin
c. Trademark, if any
d. Drum identification number
e. Size of conductor
f. Length of conductors
g. Gross mass of the package
h. Net mass of conductor
i. Position of the conductor end
j. Consignee name and address

10.0 Storage and Shipping

10.1 Conductor reels should be stored and shipped upright, **NOT** on their side.

10.2 Both cable ends should be sealed to prevent the entrance of moisture, on each reel unit.

10.3 For shipment, each unit shall be securely packaged and wrapped to avoid damage and for safe handling.

11.0 Technical Data Schedule

Conductors: Covered Aluminum Conductors			
Bidder:			
Item No:			
#	Description	Unit	Vendor Proposed Values
	Standard		
1	Standard(s) to which conductor is manufactured		
	Conductor Size		
2	Number and diameter or Aluminum Strands	No./ mm	
3	Diameter of steel strands	No. / mm	
4	Total cross sectional area of conductor	mm2	
5	Overall diameter of bare conductor	mm	
	Properties of Wire		
6	Ultimate breaking load of conductor	kg	
7	Rated Tensile Strength	kg	
8	Equivalent modulus of elasticity	kg/mm2	
9	Maximum stress	kg/mm2	
10	Equivalent coefficient of linear expansion per degrees Celsius		
11	Current Rating	Amps	
12	Maximum continuous current carrying capacity of conductor at ambient 50 degrees Celsius	Amps	
13	Conductor Temperature for condition at item 12	degrees Celsius	
14	Short time overload current capacity of conductor at ambient 50oC		
	1hour duration	Amps	
	3 hour duration	Amps	
15	Resistance of conductor per km at 75 degrees Celsius	Ω/km	
16	Maximum DC resistance per kM at 20oC	Ω/km	

17	Maximum AC resistance per km at 80oC	Ω/km	
18	Reactance per KM	Ω/km	
19	Weight of conductor per km		
	Insulation		
20	Insulator material	XLPE/HDPE	
21	Insulator thickness	mm	
	Construction		
22	Lay ratio for Aluminium Conductor		
	Min		
	Max		
23	Lay ratio for Steel Conductor		
	Min		
	Max		
	Test Report Checklist		
24	Conductor Resistance Test included	yes/no	
25	Measurement of lay ratio/direction of lay included	yes/no	
26	Wrapping Test included	yes/no	
27	Tensile strength included	yes/no	
28	Measurement of overall diameter included	yes/no	
29	Measurement of individual wires included	Yes/no	
30	Insulation Resistance test included	Yes/no	
31	Test for the thickness of insulation and sheath	Yes/no	
	Packaging and Shipping		
32	Drum Type		
33	Length of conductor	meter	

34	Dimensions of Drum		
35	Gross weight	kg	
36	Net weight	kg	
37	Marking as per specification		

AAC Covered Overhead Conductor

1.0 Glossary

AAC	*All Aluminum Conductor*
AWG	*American wire gauge*
Covered	*Insulated*
GPL	*Guyana Power and Light Incorporated*
HDPE	*High density Poly Ethylene*
Kcmil	*One thousand circular mil, where 1 kcmil = 050667mm^2*
UV	*Ultra violet*
XLPE	*Cross-linked Poly Ethylene*

2.0 Scope

This specification covers All Aluminum Conductors (AAC) Covered Overhead conductor, which shall be operated on 60 Hz GPL's distribution system.

3.0 Standards

Covered AAC overhead conductor must meet or exceed all applicable requirements of the latest editions of the following standards:

- ASTM B 230: Aluminum 1350–H19 Wire for Electrical Purposes
- ASTM B 231: Concentric-Lay-Stranded Aluminum 1350 Conductors
- ASTM B-1248 - Polyethylene Plastics Molding and Extrusion Materials.
- ASTM C-8.35 - Specifications for Weather-Resistant Polyethylene-Covered Wire and Cable.
- ICEA S-70-547: WEATHER-RESISTANT POLYETHYLENE COVERED CONDUCTORS
- NEMA WC-26: Binational Wire and Cable Packaging Standards.

- EN 50397-1:2020: Covered Conductors for Overhead Lines and the Re ated Accessories for Rated Voltages Above 1kV and not Exceeding 36kVAC – Part 1: Covered Conductors

4.0 Environmental Conditions

4.1 The conductor to be supplied against this specification shall be suitable for satisfactory continuous operation under the following tropical coastal conditions.

a. Maximum ambient temperature 50 ^{0}C
b. Minimum ambient temperature 15 ^{0}C

c. Relative Humidity 100%
d. Maximum Annual Rainfall 1010mm
e. Maximum altitude above mean sea level 1000m

4.2 The conductor shall be designed and protected for use in exposed, heavily polluted and salty, corrosive and humid tropical coastal atmospheric conditions.

5.0 Conductor Size

5.1 The conductor sizes for the covered overhead AAC conductors are as shown below, along with their respective code names.

a. 7/ 3.12mm (53.5mm2) – Poppy
b. 7/ 4.42mm (107.22mm2) – Oxlip
c. 19/ 3.38mm (170.58mm2) – Tulip

5.2 A tolerance of +1% of the nominal diameter of aluminum or aluminum alloy wires shall be permitted.

5.3 No negative tolerance shall be permitted on the nominal diameter aluminum wire used inthe manufacture of AAC covered conductor.

6.0 Properties of Wires

The proceeding table outlines the required properties of each covered overhead AAC conductor, utilized by GPL Inc.

Actual	Stranding &	Approx.	Approx.	Calculated	Rated	Current

Area (mm^2)	wire dia. (mm)	overall dia. (mm)	mass (kg/km)	resistance at 20^0C (ohm/km)	Strength (kN)	rating (Amps)
52.5	7/ 3.12	9.35	147.32	0.656	8.852	247
107.22	7/ 4.42	13.26	294.65	0.325	17.0 7	383
170.58	19/ 3.38	16.89	468.77	0.197	27.3 7	513

7.0 Construction

7.1 There shall be no joint in any wire of a stranded conductor containing seven wires, except those made in the base rod or wire before final drawing.

7.2 For conductors containing more than seven wires, joints in individual wires are permitted in any layer except the outermost layer (in addition to those made in the brass rod or wire before final drawing) but no two such joints shall be less than 15 m apart in the complete stranded conductor.

7.3 Any joint shall be made by resistance or cold pressure butt welding. They are not required to fulfil the mechanical requirement of unjointed wires.

7.4 Joints made by resistance butt welding shall, after welding, be annealed over a distance of at least 200 m on each side of the joint.

7.5 The wires used in the construction of a stranded conductor shall before stranding satisfy all the relevant requirements of this standard. The lay ratio of the different layers shall be withinthe limit given below:

No. of Wires in Conductors	Lay Ratio in			
	6-wire layer		12-wire layer	
	Min.	Max.	Min.	Max.
7	10	14	-	-

9	10	16	10	14

7.6 In all constructions, the successive layers shall have opposite directions of lay, the outer most layer being right-handed. The wires in each layer shall be evenly and closely stranded.

7.7 In all aluminum stranded conductors having multiple layers of wires, the lay ratio of any layer shall not be greater than the lay ratio of the layer immediately beneath it.

7.8 The Insulation should be dual layered with the Inner Layer being XLPE with a nominal thickness of **1.8 mm for 15 kV rated network**, and the Outer Layer being a suitable XLPE or HDPE which is UV Resistant, Non-Tracking and Erosion Resistant with a nominal wall thickness of **1.7mm for 15kV rated network**. The minimum combined Insulation Thicknessof both Layers should be 2.5 mm.

7.9 The conductor manufacturing and stranding process shall incorporate the longitudinal water blocking also. The Semi Conducting Screen, Inner Insulation and Outer Insulation should be extruded in one step i.e. triple extrusion to ensure a good, permanent bond between the three layers and with the conductor.

7.10 It shall be possible to remove the Semi Conducting Screen, Inner and Outer Insulation Layers without damage to the conductor. The Semi Conducting Screen, Inner Insulation and Outer Insulation should be extruded in one step ie triple extrusion to ensure a good, permanent bond between the three layers and also with the conductor.

8.0 Commissioning

8.1 Certified test reports of Routine/Acceptance tests, are required for all conductors supplied to Guyana Power and Light Inc, and shall be supplied upon delivery, and shall include:

a. Conductor Resistance Test
b. Insulation Resistance Test
c. Measurement of lay ratio /direction of lay
d. Wrapping Test
e. Tensile strength and elongation at break
f. Test for the thickness of insulation and sheath
g. Measurement of overall diameter
h. Measurement of individual wires

8.2 Conductors shall be supplied on non-returnable wooden reel/drums. All reels shall be designed to NEMA WC-26 standard or equivalent and are to be constructed to withstand therigors of overseas shipping.

8.3 For wooden drums, preventative treatment, of a quality and amount which is not harmful tothe conductor, shall be applied to the entire drum.

8.4 The wire shall be smooth and free from all imperfections such as spills, splits, slag inclusion,die marks scratches, fittings, blow holes, projections, looseness, overlapping of strands, chipping of aluminum layers etc. and all such other defects which may hamper the mechanical and electrical properties of the conductor. Special care should be taken to keep away dirt, grit etc. during stranding.

9.0 Marking

The following information shall be marked on each package in indelible ink:

a. Manufacturer's name
b. Country of Origin
c. Trademark, if any
d. Drum identification number
e. Size of conductor
f. Length of conductors
g. Gross mass of the package
h. Net mass of conductor
i. Position of the conductor end
j. Consignee name and address

10.0 Storage and Shipping

10.1 Conductor reels should be stored and shipped upright, **NOT** on their side.

10.2 Both cable ends should be sealed to prevent the entrance of moisture, on each reel unit.

10.3 For shipment, each unit shall be securely packaged and wrapped to avoid damage and for safe handling.

11.0 Technical Data Schedule

Conductors: Covered Overhead Aluminum Conductors			
Bidder:			
Item No:			
#	Description	Unit	Vendor Proposed Values
	Standard		
1	Standard(s) to which conductor is manufactured		
	Conductor Size		
2	Number and diameter or Aluminum Strands	No./ mm	
3	Diameter of steel strands	No. / mm	
4	Total cross sectional area of conductor	mm2	
5	Overall diameter of bare conductor	mm	
	Properties of Wire		
6	Ultimate breaking load of conductor	kg	
7	Rated Tensile Strength	kg	
8	Equivalent modulus of elasticity	kg/mm2	
9	Maximum stress	kg/mm2	
10	Equivalent coefficient of linear expansion per degrees Celsius		
11	Current Rating	Amps	
12	Maximum continuous current carrying capacity of conductor at ambient 50 degrees Celsius	Amps	
13	Conductor Temperature for condition at item 12	degrees Celsius	
14	Short time overload current capacity of conductor at ambient 50oC		
	1hour duration	Amps	
	3 hour duration	Amps	
15	Resistance of conductor per km at 75 degrees Celsius	Ω/km	
16	Maximum DC resistance per kM at 20oC	Ω/km	
17	Maximum AC resistance per km at 80oC	Ω/km	

18	Reactance per KM	Ω/km	
19	Weight of conductor per km		
	Insulation		
20	Insulator material	XLPE/HDPE	
21	Insulator thickness	mm	
	Construction		
22	Lay ratio for Aluminium Conductor		
	Min		
	Max		
23	Lay ratio for Steel Conductor		
	Min		
	Max		
	Test Report Checklist		
24	Conductor Resistance Test included	yes/no	
25	Measurement of lay ratio/direction of lay included	yes/no	
26	Wrapping Test included	yes/no	
27	Tensile strength included	yes/no	
28	Measurement of overall diameter included	yes/no	
29	Measurement of individual wires included	Yes/no	
30	Insulation Resistance test included	Yes/no	
31	Test for the thickness of insulation and sheath	Yes/no	
	Packaging and Shipping		
32	Drum Type		
33	Length of conductor	meter	
34	Dimensions of Drum		

35	Gross weight	kg	
36	Net weight	kg	
37	Marking as per specification		

Annealed Binding Round Wire

1.0 Glossary

ACSR	*Aluminum Conductor Steel Re-inforced Cable*
AWG	*American wire gauge*
Bare	*Uninsulated conductor*
GPL	*Guyana Power and Light Incorporated*
Lay ratio	*Ratio of the aerial length of a complete turn of the helix formed by an individual wire in a stranded conductor to the external diameter of the helix*

2.0 Scope

This specification covers the details of Annealed Binding Round Wire which shall be used on 60Hz distribution and transmission network.

3.0 Standards

The Annealed Conductor must meet or exceed all applicable requirements of the latest editionsof the following standard:

- ASTM B 609: Standard Specification for Aluminum 1350 Round Wire, Annealed and Intermediate Tempers, for Electrical Purposes

4.0 Environmental Conditions

4.1 The conductor to be supplied against this specification shall be suitable for satisfactory continuous operation under the following tropical coastal conditions.

a. Maximum ambient temperature 50 ^{0}C
b. Minimum ambient temperature 15 ^{0}C
c. Relative Humidity 100%
d. Maximum Annual Rainfall 1010mm
e. Maximum altitude above mean sea level 1000m

4.2 The conductor shall be designed and protected for use in exposed, heavily polluted and salty, corrosive and humid tropical coastal atmospheric conditions.

5.0 Conductor Sizes

5.1 The conductor size for the annealed conductor shall be 4 AWG.

5.2 A tolerance of +1% of the nominal diameter shall be permitted.

5.3 No negative tolerance shall be permitted on the nominal diameter of the wire.

6.0 Properties of Wires

The proceeding table outlines the required properties of the annealed wire, utilized by GPL Inc.

Conductor size		**Stranding (NOS)**	**Nominal Dia. (mm)**	**Approx. mass (kg/km)**	**Calculated resistance at 20^0C (ohm/km)**	**Tension Strength (Mpa)**
AWG	Mm^2					
4	20	1/Solid	5.05	54	1.40	60-95

7.0 Commissioning

7.1 The wire shall be smooth and free from all imperfections such as spills, splits, slag inclusion, dia. marks scratches, fittings, blow holes, projections, looseness, overlapping of strands, chipping of aluminum layers etc. and all such other defects which may hamper the mechanical and electrical properties of the conductor. Special care should be taken to keep away dirt, grit etc. during stranding.

7.2 There shall be no joint in any wire.

7.3 Conductors shall be supplied on non-returnable wooden reel/drums. All reels shall be designed to NEMA WC-26 standard or equivalent and are to be constructed to withstand therigors of overseas shipping.

7.4 For wooden drums, preventative treatment, of a quality and amount which is not harmful to the conductor, shall be applied to the entire drum.

7.5 Certified test reports of Routine/Acceptance tests, are required for all conductors supplied to Guyana Power and Light Inc, and shall be supplied upon delivery, and shall include:

a. Conductor Resistance Test
b. Wrapping Test
c. Tensile strength
d. Measurement of overall diameter

8.0 Marking

The following information shall be marked on each package in indelible ink:

a. Manufacturer's name
b. Country of Origin
c. Trademark, if any
d. Drum identification number
e. Size of conductor
f. Length of conductors
g. Gross mass of the package
h. Net mass of conductor
i. Position of the conductor end
j. Consignee name and address

9.0 Storage and Shipping

9.1 Conductor reels should be stored and shipped upright, **NOT** on their side.

9.2 For shipment, each unit shall be securely packaged and wrapped to avoid damage and for safe handling.

Galvanised Guy-Wire

1.0 Glossary

AWG	*American wire gauge*
GPL	*Guyana Power and Light Incorporated*
Kcmil	*One thousand circular mil, where 1 kcmil = 050667mm^2*
Lay ratio	*Ratio of the aerial length of a complete turn of the helix formed by an individual wire in a stranded conductor to the external diameter of the helix*

2.0 Scope

This specification covers galvanized guy-wire used by GPL Inc.

3.0 Standards

Guy-wire must meet or exceed all applicable requirements of the latest editions of the following standards:

- ASTM A855: Standard Specification for Zinc 5% Aluminum Mischmetal Alloy-Coated Steel Wire Strand.

4.0 Environmental Conditions

4.1 The guy wire to be supplied against this specification shall be suitable for satisfactory continuous operation under the following tropical coastal conditions.

a.	Maximum ambient temperature	50 ^{0}C
b.	Minimum ambient temperature	15 ^{0}C
c.	Relative Humidity	100%
d.	Maximum Annual Rainfall	1010mm
e.	Maximum altitude above mean sea level	1000m

4.2 The conductor shall be designed and protected for use in exposed, heavily polluted and salty, corrosive and humid tropical coastal atmospheric conditions.

5.0 Wire Sizes

5.1 The respective sizes (diameter) for guy-wire utilized by GPL Inc, are as shown below.

a. 5/16 inch
b. 7/16 inch

a.2 A tolerance of +1% of the nominal diameter of aluminum wires shall be permitted

5.3 No negative tolerance shall be permitted on the nominal diameter aluminum wire used in the manufacture of galvanize guy wire.

6.0 Properties of Wires

The proceeding table outlines the required properties of each guy-wire, utilized by GPL Inc.

Strand Diameter (inches)	**Wire Per Strand**	**Approx. overall dia. (inches)**	**Approx. weight/1000ft**	**Minimum Breaking Strength (lbs)**	**Min. weight of Coating CLASS A**	**Min. weight of Coating CLASS B**	**Min. weight of Coating CLASS C**
5/16	7	0.104	205	6000	0.80	1.6	2.4
7/16	7	0.145	399	18000	0.90	1.8	2.7

7.0 Construction

7.1 The wires used in the construction of a stranded conductor shall before stranding satisfy all the relevant requirements of this standard. The lay ratio of the different layers shall be withinthe limit shown in the table below:

No. of Wires in Conductors	7-wire layer	
	Min.	Max.
7	12	16

7.2 The lay direction shall be left hand lay.

8.0 Commissioning

8.1 The wire shall be smooth and free from all imperfections such as spills, splits, slag inclusion, dia. marks scratches, fittings, blow holes, projections, looseness, overlapping of strands, chipping of aluminum layers etc. and all such other defects which may hamper the

mechanical and electrical properties of the conductor. Special care should be taken to keepaway dirt, grit etc. during stranding.

8.2 There shall be no joint in any wire of a stranded conductor containing seven wires, except those made in the base rod or wire before final drawing.

8.3 Certified test reports of Routine/Acceptance tests, are required for all conductors supplied to Guyana Power and Light Inc, and shall be supplied upon delivery, and shall include:

a. Galvanising Test (Uniformity of Galvanising and mass of coating)
b. Tensile strength
c. Measurement of overall diameter

9.0 Marking

The following information shall be marked on each package in indelible ink:

a. Manufacturer's name
b. Country of Origin
c. Trademark, if any
d. Drum identification number
e. Size of guy-wire
f. Length of guy-wire
g. Gross mass of the package
h. Net mass of guy-wire
i. Position of the guy-wire end
j. Consignee name and address

10.0 Shipping and Storage

The conductors shall be wound in reels or drums conforming to the latest versions of ASTM orIEEE standards and shipped in an upright position.

Medium -Hard Drawn Bare Copper Wire

1.0 Glossary

AWG	*American wire gauge*
GPL	*Guyana Power and Light Incorporated*
Kcmil	*One thousand circular mil, where 1 kcmil = 050667mm^2*

2.0 Scope

This specification covers medium- hard drawn bare copper wire used by GPL Inc, for earthing purposes.

3.0 Standards

Hard drawn conductor must comply with the latest editions of the following ASTM standards.

- B-2 Medium-Hard Copper Wire.
- B-8 Concentric-Lay-Stranded Hard, Medium-Hard or Soft Copper Conductor.
- B-33 Tinned Conductors
- B-787 19 Wire Combination Unilay-Stranded Soft copper wire

4.0 Environmental Conditions

4.1 The conductor to be supplied against this specification shall be suitable for satisfactory continuous operation under the following tropical coastal conditions.

a.	Maximum ambient temperature	50 ^{0}C
b.	Minimum ambient temperature	15 ^{0}C
c.	Relative Humidity	100%
d.	Maximum Annual Rainfall	1010mm
e.	Maximum altitude above mean sea level	1000m

4.2 The conductor shall be designed and protected for use in exposed, heavily polluted and salty, corrosive and humid tropical coastal atmospheric conditions.

5.0 Wire Sizes

5.1 The respective sizes (diameter) for medium-hard drawn copper wire utilized by GPL Inc, isas shown below.

- 4 AWG/ Copper – solid, medium

5.2 No negative tolerance shall be permitted on the nominal diameter of the wire used in the manufacturing.

6.0 Properties of Wires

6.1 The proceeding table outlines the required properties of the medium-hard drawn copper wire, utilized by GPL Inc.

Size (AWG)	**Weight (lbs/1000ft)**	**Diameter (mils)**	**Medium-Hard Drawn**		**Ampacity**
			Rated Strength (lbs)	DC Resistance (ohms/1000ft) @20°C	
4	126.3	204.3	1584	0.257	170

7.0 Commissioning

7.1 The wire shall be smooth and free from all imperfections such as spills, splits, slag inclusion,dia. marks scratches, fittings, blow holes, projections, looseness, overlapping of strands, chipping of aluminum layers etc. and all such other defects which may hamper the mechanical and electrical properties of the conductor. Special care should be taken to keep away dirt, grit etc. during stranding.

7.2 There shall be no joint in any wire.

7.3 Conductors shall be supplied on non-returnable wooden reel/drums. All reels shall be designed to NEMA WC-26 standard or equivalent and are to be constructed to withstand therigors of overseas shipping.

7.4 For wooden drums, preventative treatment, of a quality and amount which is not harmful to the conductor, shall be applied to the entire drum.

7.5 Certified test reports of Routine/Acceptance tests, are required for all conductors supplied to GPL Inc, and shall be supplied upon delivery, and shall include:

a. Conductor Resistance Test
b. Annealing Test
c. Measurement of overall diameter

8.0 Marking

The following information shall be marked on each package in indelible ink:

- Manufacturer's name
- Country of Origin
- Trademark, if any
- Drum identification number
- Code name and size of conductor
- Length of conductors
- Gross mass of the package
- Net mass of conductor
- Position of the conductor end
- Consignee name and address

9.0 Storage and Shipping

9.1 Conductor reels should be stored and shipped upright, **NOT** on their side.

9.2 For shipment, each unit shall be securely packaged and wrapped to avoid damage and forsafe handling.

Neutral-Supported Overhead Multiplex Conductors

1.0 Glossary

AAC	*Aluminum Alloy Conductor*
AWG	*American wire gauge*
Bare	*Uninsulated conductor*
Duplex	*Bundled conductor having a single bare neutral and a single insulated conductor.*
GPL	*Guyana Power and Light Incorporated*
Triplex	*Bundled conductor having a single bare neutral and two insulated conductors.*
Quadruplex	*Bundled conductor having a single bare neutral and three insulated conductors.*
XLPE	*Cross-linked polyethylene*

2.0 Scope

This specification covers neutral-supported overhead, cross-linked polyethylene insulated (XLPE), aluminum conductors for secondary and overhead service drop applications, on 60 Hz distribution systems, for voltages less than 600 volts between insulated conduct rs. All multiplex conductors shall be supplied with a bare aluminum alloy neutral messenger.

3.0 Standards

The neutral-supported overhead multiplex conductor must meet or exceed all applicable requirements of the latest editions of the following standards:

- ASTM B-398: Standard Specification for Aluminum Alloy 6201-T81 and 6201-T83 Wirefor Electrical Purposes
- ASTM B-399: Standard Specification for Concentric-Lay-Stranded Aluminum-Alloy 6201-T81 Conductors
- ASTM B-230: Standard Specification for Aluminum 1350–H19 Wire for Electrical Purposes
- ASTM B-231: Standard Specification for Concentric-Lay-Stranded Aluminum 1350 Conductors
- NEMA WC-26: Binational Wire and Cable Packaging Standards
- ICEA S-95-648/NEMA WC70: Non-Shielded 0-2kV Cables
- ICEA S-76-474: Standard for Neutral Supported Power Cable Assemblies with Weather Resistant Extruded Insulation Rated 600 Volts

4.0 Environmental Conditions

The neutral-supported overhead multiplex conductor(s) to be supplied against this specification shall be suitable for satisfactory continuous operation under the following tropical coastal conditions.

- Maximum ambient temperature 50 ^{0}C
- Minimum ambient temperature 15 ^{0}C
- Relative Humidity 100%
- Maximum Annual Rainfall 1010mm
- Maximum altitude above mean sea level 1000m

The conductor shall be designed and protected for use in exposed, heavily polluted and salty, corrosive and humid tropical coastal atmospheric conditions.

5.0 Operating Voltage

The conductor must be engineered to operate at a maximum of 600 volts.

6.0 Conductor Sizes

The conductor sizes for the multiplex conductors are as shown below, along with their respective code names.

- 4 AWG AAC Duplex – Whippet
- 2 AWG AAC Duplex – Schnauzer
- 2 AWG AAC Triplex – Shrimp
- 4 AWG AAC Triplex – Barnacles
- 1/0 AWG AAC Triplex – Gammarus
- 4/0 AWG AAC Triplex – Lepas
- 1/0 AWG AAC Quadruplex - Shetland

7.0 Wire Properties

The proceeding table outlines the required properties of each neutral-supported multiplex conductor, utilized by Guyana Power and Light Inc.

Cable	Code	Phase Conductor, Size and Stranding	Insulation Thickness (mil)	Neutral messenger, Size and strength	Minimum Ampacity (A)	Weight per 1000 ft lb)	Neutral Messenger Breaking Strength
Duplex	Whippet	#4 AWG 7 strands	45	#4 AWG 7 strands	90	102	1760
Duplex	Schnauzer	#2 AWG 7strands	45	#2 AWG 7strands	120	156	2800
Triplex	Shrimp	#2 AWG 7strands	45	#2 AWG 7strands	120	239	2800

Triplex	Lobster	#2 AWG 7 strands	60	#2 AWG 7 strands	136	268	2800

Triplex	Barnacles	#4 AWG 7strands	45	#4 AWG 7strands	90	158	1760
Triplex	Gammarus	1/0 AWG 7strands	60	1/0 AWG 7strands	160	386	4460
Triplex	Lepas	4/0 AWG 19strands	60	4/0 AWG 7strands	245	730	8560
Quadruplex	Shetland	1/0 AWG 19 strands	60	1/0 AWG 7 strands	140	521	4460

8.0 Construction

8.1 Insulated conductors shall be twisted around the neutral conductors in a right-hand direction, with a lay of 25 to 60 times the diameter of one of the insulated conductors.

8.2 Insulation shall be black and manufactured from a cross-linked thermosetting polyethylene material.

8.3 The construction must be of concentric strand or compressed 1350-H19 conductor, polyethylene or cross-linked polyethylene insulation, concentric strand 6201 alloy neutral messenger

9.0 Commissioning

9.1 Certified test reports of Routine/Acceptance tests, are required for all conductors supplied to Guyana Power and Light Inc, and shall be supplied upon delivery, and shall include:

a. Conductor Resistance Test
b. Insulation Resistance Test
c. Measurement of lay ratio /direction of lay
d. Wrapping Test

e. Tensile strength and elongation at break

f. Test for the thickness of insulation and sheath

g. Measurement of overall diameter
h. Measurement of individual wires

9.2 Conductors shall be supplied on non-returnable wooden reel/drums. All reels shall bedesigned to NEMA WC-26 standard or equivalent and are to be constructed to withstand therigors of overseas shipping.

9.3 For wooden drums, preventative treatment, of a quality and amount which is not harmful to the conductor, shall be applied to the entire drum.

9.4 The wire shall be smooth and free from all imperfections such as spills, splits, slag inclusion,die marks scratches, fittings, blow holes, projections, looseness, overlapping of strands, chipping of aluminum layers etc. and all such other defects which may hamper the mechanical and electrical properties of the conductor. Special care should be taken to keep away dirt, grit etc. during stranding.

10.0 Marking

The following information shall be marked on each package in indelible ink:

a. Manufacturer's name
b. Country of Origin
c. Trademark, if any
d. Drum identification number
e. Code name and size of conductor
f. Length of conductors
g. Gross mass of the package
h. Net mass of conductor
i. Position of the conductor end
j. Consignee name and address

11.0 Storage and Shipping

11.1 Conductor reels should be stored and shipped upright, **NOT** on their side.

11.2 Both cable ends should be sealed to prevent the entrance of moisture, on each reel unit.

11.3 For shipment, each unit shall be securely packaged and wrapped to avoid damage and for safe handling.

12.0 Technical Data Schedule

Conductors: Covered Aluminum Conductors			
Bidder:			
Item No:			
Code Name:			
Number of Insulated Conductors:			
#	Description	Unit	Vendor Proposed Values
	Standard		
1	Standard(s) to which conductor is manufactured		
	Bare Conductor: Conductor Size		
2	Number and diameter or Aluminum Strands	No./ mm	
3	Total cross sectional area of conductor	mm2	
4	Overall diameter of bare conductor	mm	
	Covered Conductor: Conductor Size		
5	Number and diameter or Aluminum Strands	No./ mm	
6	Insulator material	XLPE/HDPE	
7	Insulator thickness	mm	
8	Total cross sectional area of conductor	mm2	
9	Overall diameter of covered conductor	mm	
	Properties of Wire		
10	Ultimate breaking load of conductor	kg	
11	Rated Tensile Strength	kg	
12	Equivalent modulus of elasticity	kg/mm2	

13	Maximum stress	kg/mm2	
14	Equivalent coefficient of linear expansion per degrees Celsius		
15	Current Rating	Amps	

16	Maximum continuous current carrying capacity of conductor at ambient 50 degrees Celsius	Amps	
17	Conductor Temperature for condition at item 12	degrees Celsius	
18	Short time overload current capacity of conductor at ambient 50oC		
	1hour duration	Amps	
	3 hour duration	Amps	
19	Resistance of conductor per km at 75 degrees Celsius	Ω/km	
20	Maximum DC resistance per kM at 20oC	Ω/km	
21	Maximum AC resistance per km at 80oC	Ω/km	
22	Reactance per KM	Ω/km	
23	Weight of conductor per km		
	Construction		
24	Lay ratio for Aluminium Conductor		
	Min		
	Max		
25	Lay ratio for Steel Conductor		
	Min		
	Max		
	Test Report Checklist		
26	Conductor Resistance Test included	yes/no	
27	Measurement of lay ratio/direction of lay included	yes/no	
28	Wrapping Test included	yes/no	
29	Tensile strength included	yes/no	
30	Measurement of overall diameter included	yes/no	
31	Measurement of individual wires included	Yes/no	
32	Insulation Resistance test included	Yes/no	

33	Test for the thickness of insulation and sheath	Yes/no	

	Packaging and Shipping		
34	Drum Type		
35	Length of conductor	meter	
36	Dimensions of Drum		
37	Gross weight	kg	
38	Net weight	kg	
39	Marking as per specification		

Bare Overhead AAAC Conductors

1.0 Glossary

AAAC	*All Aluminum Alloy Conductor*
AWG	*American wire gauge*
Bare	*Uninsulated conductor*
GPL	*Guyana Power and Light Incorporated*
Kcmil	*One thousand circular mil, where 1 kcmil = 050667mm^2*

2.0 Scope

This specification provides details for All Aluminum Alloy Conductor (AAAC) Bare Overhead conductor, for the use on overhead lines operated by Guyana Power and Light Incorporated.

3.0 Standards

Bare conductor must meet or exceed all applicable requirements of the latest editions of thefollowing standards:

- ASTM B-398: Standard Specification for Aluminum Alloy 6201-T81 and 6201-T83 Wirefor Electrical Purposes
- ASTM B-399: Standard Specification for Concentric-Lay-Stranded Aluminum-Alloy 6201-T81 Conductors
- NEMA WC-26: Binational Wire and Cable Packaging Standards
- BS EN 50183: Conductors for Overhead Lines Aluminum-magnesium-silicon alloy wires.

4.0 Environmental Conditions

4.1 The conductor(s) to be supplied against this specification shall be suitable for satisfactory continuous operation under the following tropical coastal conditions.

a. Maximum ambient temperature 50 ^{0}C
b. Minimum ambient temperature 15 ^{0}C
c. Relative Humidity 100%
d. Maximum Annual Rainfall 1010mm
e. Maximum altitude above mean sea level 1000m

4.2 The conductor shall be designed and protected for use in exposed, heavily polluted and salty, corrosive and humid tropical coastal atmospheric conditions.

5.0 Conductor Sizes

5.1 The conductor size for the bare overhead AAAC conductor being used by GPL is 394.5 kcmil, with a code name Canton.

5.2 A tolerance of +1% of the nominal diameter of aluminum wires shall be permitted

5.3 No negative tolerance shall be permitted on the nominal diameter aluminum wire used in the manufacture of AAA conductor.

6.0 Properties of Wires

The proceeding table outlines the required properties of each bare AAAC conductor, utilized by Guyana Power and Light Inc.

Size (AWG or kcmil)	Stranding	Approx. Indiv. Dia	Approx. overall dia. (inch)	Approx. mass (lbs/1000')	Calculated resistance at 20^{0}C (ohm/1000')	Rated Strength (lbs)	Current rating (Amps)
394.5	19	0.1441	0.721	367.9	0.061	13300	532

7.0 Construction

7.1 For conductors containing more than seven wires, joints in individual wires are permitted in any layer except the outermost layer (in addition to those made in the brass rod or wire before final drawing) but no two such joints shall be less than 15 m apart in the complete stranded conductor.

7.2 Any joint shall be made by resistance or cold pressure butt welding. They are not required to fulfil the mechanical requirement of unjointed wires.

7.3 Joints made by resistance butt welding shall, after welding, be annealed over a distance of at least 200 m on each side of the joint.

7.4 In all constructions, the successive layers shall have opposite directions of lay, the outer most layer being right-handed. The wires in each layer shall be evenly and closely stranded.

8.0 Commissioning

8.1 Certified test reports of Routine/Acceptance tests, are required for all conductors supplied to Guyana Power and Light Inc, and shall be supplied upon delivery, and shall include:

a. Conductor Resistance Test
b. Measurement of lay ratio /direction of lay
c. Wrapping Test
d. Tensile strength
e. Measurement of overall diameter
f. Measurement of individual wires

8.2 Conductors shall be supplied on non-returnable wooden reel/drums. All reels shall be designed to NEMA WC-26 standard or equivalent and are to be constructed to withstand therigors of overseas shipping.

8.3 For wooden drums, preventative treatment, of a quality and amount which is not harmful tothe conductor, shall be applied to the entire drum.

8.4 The wire shall be smooth and free from all imperfections such as spills, splits, slag inclusion,die marks scratches, fittings, blow holes, projections, looseness, overlapping of strands, chipping of aluminum layers etc. and all such other defects which may hamper the mechanical and electrical properties of the conductor. Special care should be taken to keep away dirt, grit etc. during stranding.

9.0 Marking

The following information shall be marked on each package in indelible ink:

a. Manufacturer's name
b. Country of Origin
c. Trademark, if any
d. Drum identification number
e. Code name and size of conductor
f. Length of conductors
g. Gross mass of the package
h. Net mass of conductor
i. Position of the conductor end
j. Consignee name and address

10.0 Storage and Shipping

10.1 Conductor reels/drums should be stored and shipped upright, **NOT** on their side.

10.2 Both cable ends should be sealed to prevent the entrance of moisture, on each reel unit.

10.4 For shipment, each unit shall be securely packaged and wrapped to avoid damage and for safe handling.

11.0 Technical Data Schedule

Conductors: Bare Overhead Aluminum Conductors			
Bidder:			
Item No:			
Code Name:			
#	Description	Unit	Vendor Proposed Values
	Standard		
1	Standard(s) to which conductor is manufactured		
	Conductor Size		
2	Number and diameter or Aluminum Strands	No./ mm	
3	Diameter of steel strands	No. / mm	
4	Total cross sectional area of conductor	mm2	
5	Overall diameter of bare conductor	mm	
	Properties of Wire		
6	Ultimate breaking load of conductor	kg	
7	Rated Tensile Strength	kg	
8	Equivalent modulus of elasticity	kg/mm2	
9	Maximum stress	kg/mm2	
10	Equivalent coefficient of linear expansion per degrees Celsius		
11	Current Rating	Amps	
12	Maximum continuous current carrying capacity of conductor at ambient 50 degrees Celsius	Amps	
13	Conductor Temperature for condition at item 12	degrees Celsius	
14	Short time overload current capacity of conductor at ambient 50oC		
	1hour duration	Amps	
	3 hour duration	Amps	
15	Resistance of conductor per km at 75 degrees Celsius	Ω/km	
16	Maximum DC resistance per kM at 20oC	Ω/km	

17	Maximum AC resistance per km at 80oC	Ω/km	
18	Reactance per KM	Ω/km	
19	Weight of conductor per km		
	Construction		
20	Lay ratio for Aluminium Conductor		
	Min		
	Max		
21	Lay ratio for Steel Conductor		
	Min		
	Max		
	Test Report Checklist		
22	Conductor Resistance Test included	yes/no	
23	Measurement of lay ratio/direction of lay included	yes/no	
24	Wrapping Test included	yes/no	
25	Tensile strength included	yes/no	
26	Measurement of overall diameter included	yes/no	
27	Measurement of individual wires included		
	Packaging and Shipping		
28	Drum Type		
29	Length of conductor	meter	
30	Dimensions of Drum		
31	Gross weight	kg	
32	Net weight	kg	
33	Marking as per specification		

-END OF SPECIFICATION-

Appendix II

Please see attached Spreadsheet, kindly complete schedule and submit same in PDF and Excel format.