KEY

- Three Phase Generator (G)
- Earthing Transformer
- Transformer
- 3 Phase 13.8kV Voltage Transformer
- 13.8kV Current Transformer
- 13.8kV Earth Current Transformer
- Non Extraible Breaker
- Extraible Breaker
- 13.8kV Normally Open Earthing
- Cable Termination
- 52AB
- RCO- CLOSE
- RCO-OPEN
- 13.8 kV Systems
- 0.48 kV Systems
- ANSI Protection Function- Relay

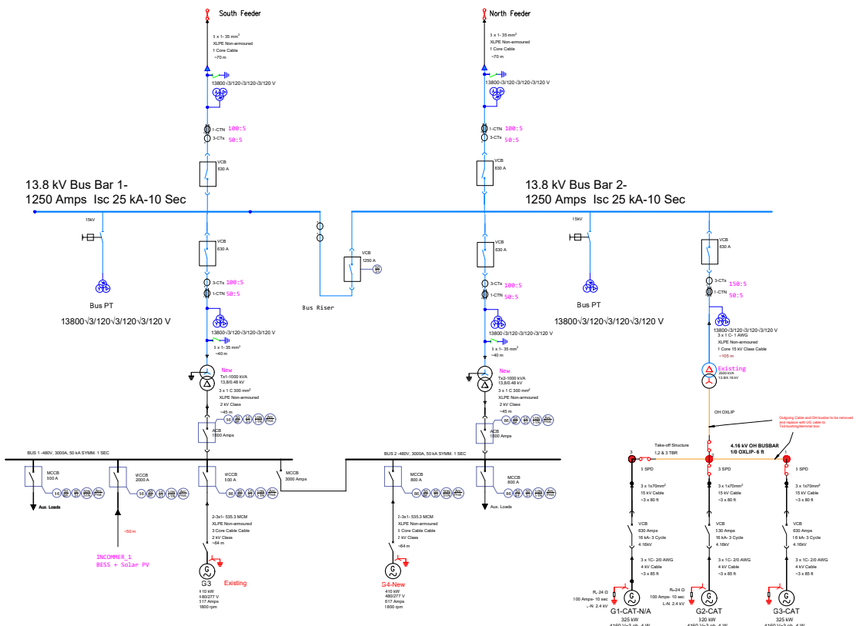

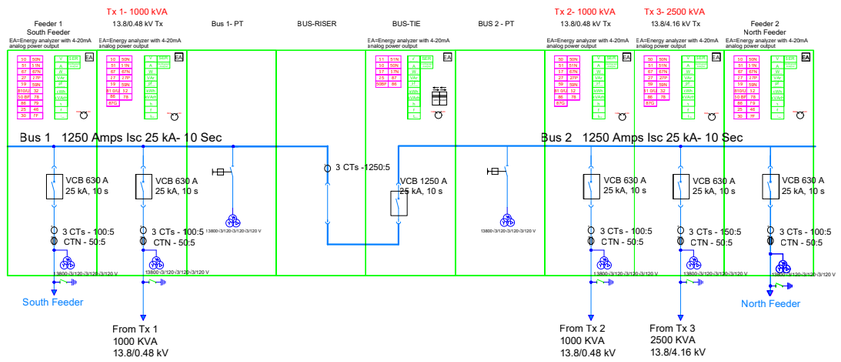

			DRAWN BY: *T Laljie*
			DESIGNED BY: *SPKD- Planning Team*
			CHECKED BY: *SPKD and TKD*
2023-07-20	Updated	T. Laljie	APPROVED BY: *Dhanraj Bachai*
2022-07-29	Updated	T. Laljie	
	Guyana Power & Light Inc- System Planning & Designs Department		MADE BY
DRAFT			SCALE N.T.S

GPL

GUYANA POWER AND LIGHT INC

WAKENAAM SINGLE LINE DIAGRAM – SOLAR PV Interconnection Project 13.8/0.48 kV System Config.

DATE	DWG. NO.	REV.
2021/12/10		